GAME 0H06
MANUAL NO. 0H06-00300-0100

DUNGEONS & DRAGONS™ is a trademark owned by and used under license from TSR, Inc. ©1987 TSR, Inc. All Rights Reserved.

Operating Manual

Bally MIDWAY™
10601 W. Belmont Ave. • Franklin Park, Illinois 60131 • U.S.A.
Telephone: (312) 451-9200 • Fax No.: 312-451-4150
Cable Address: MIDCO • Telex No.: 72-1596

GAME 0H06
MANUAL NO. 0H06-00300-0100

DUNGEONS & DRAGONS™ is a trademark owned by and used under license from TSR, Inc. ©1987 TSR, Inc. All Rights Reserved.

Operating Manual

Bally MIDWAY™
10601 W. Belmont Ave. • Franklin Park, Illinois 60131 • U.S.A.
Telephone: (312) 451-9200 • Fax No.: 312-451-4150
Cable Address: MIDCO • Telex No.: 72-1596

WARNING

THIS GAME MUST BE GROUNDED. FAILURE TO DO SO MAY RESULT IN DESTRUCTION TO ELECTRONIC COMPONENTS.

WARNING: This equipment generates, uses and can radiate radio frequency energy and if not installed and used in accordance with the instruction manual, may cause interference to radio communications. It has been tested and found to comply with the limits for a CLASS A computing device pursuant to SUBPART J of PART 15 of FCC RULES, which are designed to provide reasonable protection against such interference when operated in a commercial environment. Operation of this equipment in a residential area is likely to cause interference in which case the user at his own expense will be required to take whatever measures may be required to correct the interference.

ELECTRICAL BULLETIN: FOR ALL APPARATUS COVERED BY THE CANADIAN STANDARDS ASSOCIATION (CSA) STANDARD C22.2 NO. 1, WHICH EMPLOYS A SUPPLY CORD TERMINATED WITH A POLARIZED 2-PRONG ATTACHMENT PLUG.

CAUTION: TO PREVENT ELECTRIC SHOCK DO NOT USE THIS (POLARIZED) PLUG WITH AN EXTENSION CORD, RECEPTACLE OR OTHER OUTLET UNLESS THE BLADES CAN BE FULLY INSERTED TO PREVENT BLADE EXPOSURE.

ATTENTION: POUR PREVENIR CHOCS ELECTRIQUES NE PAS UTILISER CETTE FICHE POLARISEE AVEC UN PROLONGATEUR. UNE PRISE DE COURANT OU UNE AUTRE SORTIE DE COURANT, SAUF SI LES LAMES PEUVENT ETRE INSEREES A FOND SANS EN LAISSER AUCUNE PARTIE A DECOUVERT.

USE ONLY GENUINE BALLY MIDWAY APPROVED REPLACEMENT PARTS.

©COPYRIGHT MCMLXXXVII BY BALLY MIDWAY MFG. CO. ALL RIGHTS RESERVED.

NO PART OF THIS PUBLICATION MAY BE REPRODUCED BY ANY MECHANICAL, PHOTOGRAPHIC, OR ELECTRONIC PROCESS, OR IN THE FORM OF A PHONOGRAPHIC RECORDING, NOR MAY IT BE TRANSMITTED, OR OTHERWISE COPIED FOR PUBLIC OR PRIVATE USE, WITHOUT PERMISSION FROM THE PUBLISHER. THIS MANUAL IS FOR SERVICE USE ONLY, AND NOT FOR GENERAL DISTRIBUTION. FOR PERMISSION REQUESTS, WRITE: BALLY MIDWAY MFG. CO., 10601 W. BELMONT AVE., FRANKLIN PARK, IL 60131.

Printed In U.S.A.

DUNGEONS & DRAGONS
TABLE OF CONTENTS

SECTION 1
INSTALLATION AND GENERAL GAME OPERATION INSTRUCTIONS

DESCRIPTION	PAGE
I. INSTALLATION PROCEDURE	1-1
II. GENERAL GAME OPERATION	1-1
III. TAILORING & TESTING THE GAME	1-2
IV. GAME REGISTERS & OPTIONS	1-4
V. RECOMMENDED 3 & 5 BALL REGISTER OPTION SETTINGS	1-6
VI. TROUBLESHOOTING ON LOCATION	1-7
VII. SOLENOID & SWITCH IDENTIFICATION TABLES	1-10
VIII. LAMP IDENTIFICATION TABLE	1-11
IX. ROUTINE MAINTENANCE ON LOCATION	1-12
X. SWITCH ASSEMBLY ADJUSTMENTS	1-12
XI. SERVICE HINTS	1-12
XII. PANEL TOP PARTS LIST	1-13
XIII. RAMP PARTS, RUBBER RINGS & POSTS LIST	1-14
XIV. FEATURE OPERATION AND SCORING	1-16

SECTION 2
COMPONENT LAYOUTS, SCHEMATICS & WIRING DIAGRAMS

DESCRIPTION	PAGE
WIRING DIAGRAM—CABINET	2-1
WIRING DIAGRAM—PLAYFIELD	2-2
WIRING DIAGRAM—BACKBOX	2-5
6803 PINBALL POWER MODULE P.C. BOARD—COMPONENT LAYOUT	2-9
6803 PINBALL POWER MODULE P.C. BOARD—SCHEMATIC	2-11
6803 CONTROL P.C. BOARD—COMPONENT LAYOUT	2-12
6803 CONTROL P.C. BOARD—SCHEMATIC	2-16
PINBALL SOUND P.C. BOARD—COMPONENT LAYOUT	2-20
PINBALL SOUND P.C. BOARD—SCHEMATIC	2-23
DUAL DISPLAY P.C. BOARD—COMPONENT LAYOUT	2-26
DUAL DISPLAY P.C. BOARD—SCHEMATIC	2-29
BRIGHT-LIGHTS FUSE P.C. BOARD—COMPONENT LAYOUT & SCHEMATIC	2-30
FOUR POSITION EMITTER P.C. BOARD—COMPONENT LAYOUT & SCHEMATIC	2-31
FOUR POSITION DETECTOR P.C. BOARD—COMPONENT LAYOUT & SCHEMATIC	2-32
EPROM LIST	2-33
GLOSSARY OF UNIQUE TERMS & ABBREVIATIONS	2-33

TABLE OF FIGURES

FIGURE	PAGE
I. BLOCK DIAGRAM	ii
IIa. TOP PANEL: SOLENOID & SWITCH IDENTIFICATION	1-10
IIb. TOP PANEL: LAMP IDENTIFICATION	1-11
IIc. TOP PANEL: PARTS	1-13
IId. TOP PANEL: RAMP PARTS, RUBBER RINGS & POSTS	1-14
III. DUNGEONS & DRAGONS PINBALL GAME	1-15

BLOCK DIAGRAM—ELECTRONIC PINBALL GAME

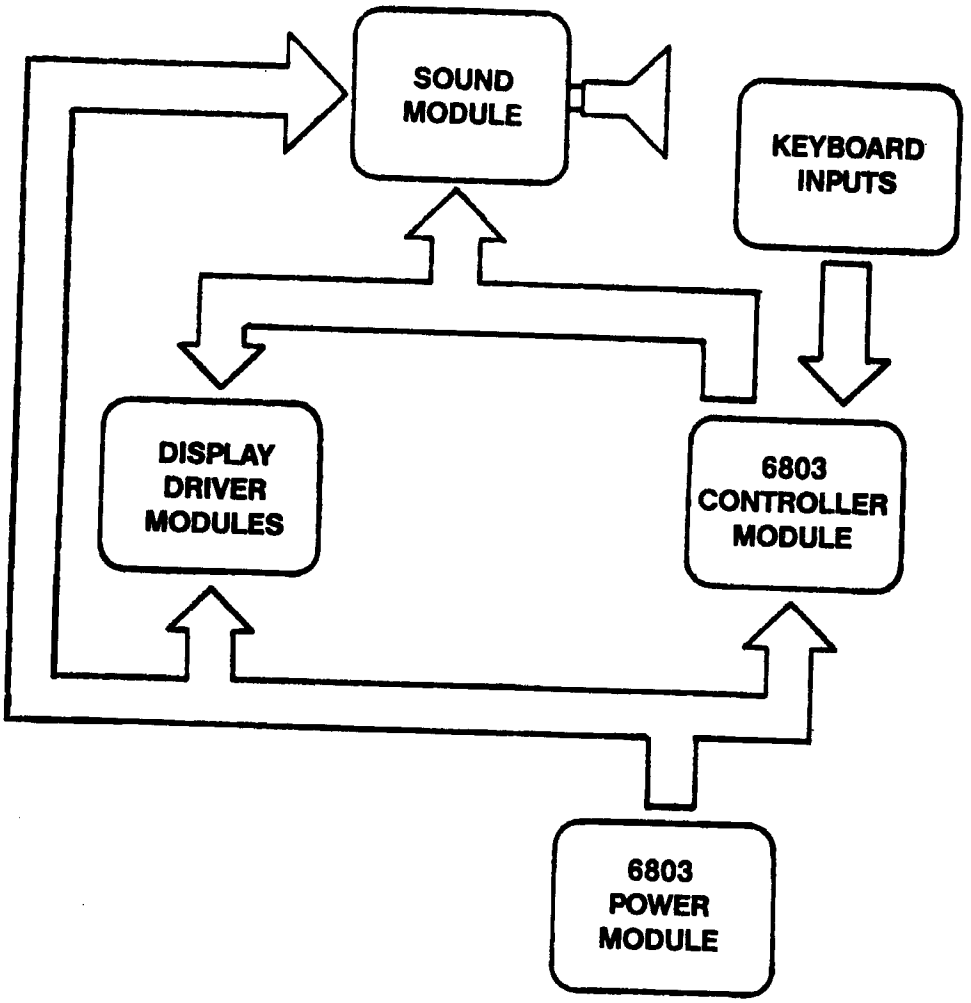

FIGURE I.

IMPORTANT NOTICE

ALL 4 PLAYFIELD BALLS MUST BE INSERTED IN THE OUTHOLE OR THE BALL TROUGH.

THIS GAME WILL NOT START IF THERE IS A BALL IN THE SHOOTER LANE IN THE GAME OVER MODE.

BACKBOX SAFETY WARNING

★★★★★★★★
★ WARNING ★
★★★★★★★★

TO AVOID INJURY TO OWNER/SERVICE PERSONNEL AND TO PREVENT DAMAGE TO THE MACHINE, THE BACKBOX MUST BE SECURED WITH THE BOLTS PROVIDED BEFORE THE MACHINE IS TRANSPORTED OR ACTIVATED.

M051-00365-A063

DETACHING OF PINBALL GAME BACKBOX

When the Backbox is in an upright position and the 3/8" hold-down bolts are removed, the Backbox can be removed from the Main Cabinet by lifting the right corner of the Backbox (about 3/4") and pulling it slightly towards you. Now both hinges are disengaged and the Backbox can be removed.

OPTIONAL BACKBOX MODIFICATION NOTICE

Two (2) BACKBOX ACCESS HOLE COVERS, part # 0H06-99138-0000, and six (6) #6 X 3/8" PHILLIPS ROUND-HEAD WOOD SCREWS, part # 0017-00101-0398, are provided in this Game's SPARE PARTS KIT ASSEMBLY, part # AH06-00032-0000. Refer to pages 7 and 52 in the DUNGEONS & DRAGONS PARTS MANUAL, # AH06-00300-0200, for parts identification.

When the game's Top Box is removed from the Backbox for any reason, each Backbox Access Hole Cover must be secured over each access hole in the top panel of the Backbox by using three (3) wood screws. Ensure that both access holes are completely covered.

SECTION 1

I. INSTALLATION PROCEDURE

First, bolt the legs to the Cabinet. Second, feed the line cord between the Backbox and the Cabinet, then mount the Backbox and secure it with the bolts provided in the spare parts kit.

On all games, there are certain items that should be checked after shipment, and they are:

1. Check that all cable connectors are completely seated on printed circuit board assemblies.
2. Check that all cables are clear of moving parts.
3. Check for wires that may have come loose during shipment.
4. Check switches for loose solder or other foreign material that may have come loose in shipment and could cause shorting of switches or lamp sockets.
5. Check coils for proper soldering. Cold solder connections may not show up in factory inspection, but vibration in shipment may break the contacts.
6. Check that fuses are firmly seated and making good contact.
7. Check and adjust the plumb bob tilt on the left side of the Cabinet.
8. Check wiring of the plug on the transformer to correspond to location voltage. FOR REFERENCE, SEE BACKBOX WIRING SCHEMATIC ON PAGE 2-5.
   For 115 VAC, install jumper wires 2-8, 3-6 and 7-10.
   For 120 VAC, install jumper wires 2-8, 4-6 and 7-11.
   For 220 VAC, install jumper wires 4-8 and 7-9.
   For 240 VAC, install jumper wires 4-8 and 7-11.
9. Place the four (4) game balls into the Playfield outhole.
10. Plug in the line cord.

II. GENERAL GAME OPERATION

Move the ON/OFF switch at the bottom right front corner of the Cabinet to the "ON" position. The game will play a power-up sound sequence and reset the drop targets. If any switches are stuck, stuck switch information is displayed at this time. After a short delay, "1-4 can play" on the display will indicate that the game is ready to play. The game should accept coins and post the appropriate credits. Pressing the credit button on the Cabinet will cause the outhole kicker to serve the ball to the shooter alley. A game-up sound sequence is played to announce play-readiness.

Each time the credit button is pressed, it posts one player and the credits are reduced by one. Shooting the ball initiates play.

The game awards all points earned by the player. If a spinner is turned and scoring when the ball hits a target, the spinner and the target scores are awarded.

When the ball enters the outhole, the bonus score is added to the total score. The player-up and/or ball in play is advanced one position. The outhole kicker serves the ball to the shooter alley and play is resumed. This continues until each player has played the allowable number of balls per game. At this time, a random Match number appears in the display. If the number is the same as in a player's score, a free credit game is awarded.

An extra ball won during the course of the game are played immediately after the player's regular ball enters the outhole. The player-up and/or ball in play are not advanced before the game serves the extra ball for play.

Slamming the machine results in a Game Over condition. This causes all feature lights to go out (the game goes "dead") and a time delay occurs. This occurs anytime either one of the slam switches make contact. This is to discourage unnecessary abuse to the game. After the delay, "1 to 4 can play" is displayed followed by the power-up sound sequence.

Any number of slam switches could be installed by the operator, to meet his/her individual requirements. The switch should be adjusted to have approximately 1/16" gap between the contacts. The weighted blade should be adjusted to attain the desired sensitivity. Decreasing the gap between contacts will make the switch more sensitive. Opening the gap will reduce sensitivity.

If at the end of the game either the "High Score to Date" is beaten or if the score is over 10,000,000, free games will be awarded according to the "High Score to Date" register setting.

Tilting the game results in the loss of the ball in play. Bonus points are not scored. The flippers, thumper bumpers, etc. go 'dead'. The purpose of the tilt penalty is to discourage the player from jostling the machine in an attempt to prolong game play. Game action returns to normal after the ball kicker assembly serves the ball to the shooter alley.

NOTE: These are general instructions. Therefore, if a spinner or drop target is not used on your specific pinball game, please disregard any operating instructions related to these devices.

III. TAILORING & TESTING THE GAME

INTRODUCTION

We at Bally/Midway are very proud to introduce our new system which not only provides more information to the operator but it also communicates with the player thru the use of alphanumerics in the display.

It was our aim to design a system which could be used without a manual. This will come to light the moment you press the Self-test button and the displays come to life with their messages of assistance. This allows you to change game features, awards and threshold settings and monitor specific special awards, game percent and income just by reading what is displayed. The registers are now described with useful titles much as "Bookkeeping Data" or "Self-Testing."

If you've ever changed the replay thresholds on a machine and you forgot to change the replay card because you were distracted by a customer, listen to this: "It will never happen again!" When you change this replay threshold to 2,000,000 in "Percent Options," the corresponding message "First Replay at 2,000,000" will be displayed in the Game Over mode.

OPERATION

The keyboard is located on the right inside wall of the game near the front door. The cable is long enough, so that once the keyboard is removed, it may be operated from outside the machine. **Note:** The keypad is mounted with a ¼" Hex screw for shipping purposes.

1. Press the Test button located on the front door. This tells the processor to do the following:
   A. It checks the switches wired in parallel with the keypad.
      If any switches are closed, the game automatically jumps to the Stuck Switch Test and displays a stuck switch message.
   B. If there were no stuck switches you will be welcomed with "Bally's Testing Is Easy As ABC."
2. When the appropriate heading appears on the backglass display, press "ENTER" on the keypad once. Within each heading, there are categories which are operator selectable. When the appropriate category appears on the backglass display, press "ENTER" once to access that category.
3. Set your registers with the keypad.
4. Press "ENTER" again to advance to the next category setting. Press "CLR" to re-start the Self-Test routine. Press "GAME" to lock-in the option settings.

STEPPING THROUGH

To choose a category quickly once the Test Mode has been selected, use the "A" button to advance to the desired category. If you pass by the category you desired, use the "B" button to back-up to the appropriate position. Once you read the category desired, press the "ENTER" button to select that topic. The display will now show the first item in that category.

Again, use the "A" and "B" buttons to select the next item you wish to look at or change. The "A" button allows you to advance to the end of a category and then out to the next category. The "B" button allows you to advance backwards in the same manner. **Please note:** When in the Self-Test category, the display will cycle automatically from one test to the next. Because the "A", "B", and "C" buttons are used for different functions in this category, they cannot be used to advance from one test to another test. To exit a test in this category, just press the "ENTER" button & advance to the next test.

SELF-PERCENTAGING

1. The term Self-Percentaging refers to the game's ability to automatically adjust the score level of Threshold 1 to attain a desired replay percentage, also known as the TARGET PERCENT. (See step #8 on page 1-3).
2. Self-Percentaging also applies to extra balls, when used instead of replays.
3. Initially, a minimum of 200 games must be played before the Self-Percentaging Process goes into effect. It then monitors the current replay percentage of Threshold 1 ONLY and makes an adjustment, if necessary, every 50 games.
4. The Self-Percentaging Process will automatically adjust the score level of Threshold 1 **ONLY.** It makes NO adjustments to OTHER "Award" features in the game.

5. Located within the "PERCENT OPTIONS" category of your game's test mode are the following registers:
   - **THRESHOLD 1**
   - **SELF PERCENT**
   - **TARGET PERCENT**
   - **THRESHOLD 1 PERCENT**

   Each of these registers are explained in detail further in this text.

6. To set or check the current score level of Threshold 1:
   A. "Step through" your game's test mode, using the "A" or "B" button on the keypad, until you reach the category titled: "PERCENT OPTIONS."
   B. Press the "ENTER" button to select this category.
   C. The first register displayed will be THRESHOLD 1.

   THRESHOLD 1—This register displays the current score level of the 1st Replay Threshold. Enter any value from 0 to 9,999,999 to set the desired score level.

7. To activate the Self-Percentaging Process:
   A. "Step through" your game's test mode, using the "A" or the "B" button on the keypad, until you reach the category titled: "PERCENT OPTIONS."
   B. Press the "ENTER" button to select this category.
   C. Again, use the "A" button to "step through" until you reach a register titled: "SELF PERCENT."

   SELF PERCENT—This register displays whether the Self-Percentaging Process is OFF or ON. Enter "0" to turn OFF or "1" to turn ON.

8. To adjust the desired Replay Percentage for Threshold 1:
   A. "Step through" your game's test mode, using "A" or "B" button on the keypad, until you reach a category titled "PERCENT OPTIONS."
   B. Press the "ENTER" button to select this category.
   C. Again, use the "A" button to "step through" until you reach the register titled: "TARGET PERCENT."

   TARGET PERCENT—This register displays the desired percentage of replays to be awarded for reaching Threshold 1. For example, if you want Threshold 1 to award a replay in 15% of the games played, you would press keys "1," "5," and then "ENTER." This register will then display "15%" as your goal or "TARGET PERCENT."

   NOTE: This register automatically defaults to a factory setting of "10%," when the "FACTORY RESET" register is enabled.

9. The TOTAL Replay Percentage will be 10% or 15% higher with the addition of Match, Special and High Score to Date credits.

10. To manually check the current Replay Percentage of Threshold 1 only:
    A. "Step through" your game's test mode, using the "A" or "B" button on the keypad, until you reach a category titled: "PERCENT OPTIONS."
    B. Press the "ENTER" button to select this category.
    C. Again, use the "A" button to "step through" until you reach the register titled: "THRESHOLD 1 PERCENT."

    THRESHOLD 1 PERCENT—The figure displayed in this register is the <u>actual</u> percentage of replays awarded for reaching Threshold 1. Progress of the Self-Percentaging Process may be monitored by comparing the current value displayed in this register with the "TARGET PERCENT."

11. The size of adjustment, made by the Self-Percentaging Process to the score level of Threshold 1, is determined by the current difference between the "TARGET PERCENT" (entered by the operator) and the <u>actual</u> percentage of replays awarded for reaching Threshold 1.
    - A difference of 10% or more will result in a 10% adjustment.
    - A difference equal to or greater than 5%, but less than 10%, will result in a 5% adjustment.
    - A difference less than 5% will result in a 1% adjustment.

12. To check the current score level of Threshold 1, refer to step #6 above.

13. When the "CLEAR BOOKKEEPING" register is enabled, the Self-Percentaging Process is re-initiated.

IV. DUNGEONS & DRAGONS— GAME REGISTERS & OPTIONS

BOOKKEEPING DATA

TOTAL COINS	Number Of Coins Thru Chutes 1, 2, & 3
GAME PERCENT	Percentage Of Replays
COINS CHUTE 1	# Of Coins Thru Chute 1
COINS CHUTE 2	# Of Coins Thru Chute 2
COINS CHUTE 3	# Of Coins Thru Chute 3
BONUS CREDITS	Number Of Bonus Credits Given
TOTAL PLAYS	Number Of Plays Both Paid And Replays
TOTAL REPLAYS	Number Of Awarded Games
SERVICE METER	Total # Of Service Credits
GAME CREDITS	Current Game Credits—Enter 0 thru 5. Credits are added to Service Meter. These credits are NOT added to current Game Credits.
SPECIAL METER	Total # Of Playfield Specials Awarded
CLEAR BOOKING	To clear bookkeeping data, press "65" & then press "ENTER."

SELF-TESTING

SINGLE LAMP	Lights one lamp at a time and also displays SCR (Lamp Driver) number and connector ID. Press "A" to advance, "B" to back-up and "C" to cycle.
ALL LAMPS	All lamps light alternately; first displaying "A" phase and then "B" phase.
DISPLAY	Steps thru alphanumeric character set.
SOLENOID	Energizes one solenoid at a time, then displays solenoid driver number and connector ID.
SINGLE SOLENOID	Energizes one solenoid at a time. Press "A" for same solenoid. Press "B" for next solenoid.
SOUND	Plays game sounds.
GAME ROM ID	Displays ROM or ROM's ID.
SWITCH TEST	Displays stuck switch by description. **NOTE: PRESS TEST BUTTON ON DOOR TO EXIT SWITCH TEST.**

PERCENT DATA VALUES

GAME PERCENT	Percentage Of Replays
TOTAL PLAYS	Number Of Plays Both Paid And Replays
GAME TIME	Total Number Of Minutes
TOTAL REPLAYS	Total Number Of Replays
THRESHOLD 1	# Of Times The Point Total Exceeded The First Threshold Level
THRESHOLD 2	# Of Times The Point Total Exceeded The Second Threshold Level
THRESHOLD 3	# Of Times The Point Total Exceeded The Third Threshold Level
HI-SCORE BEATEN	# Of Times The Point Total Exceeded The High Score
FREE BALLS	# Of Extra Balls Awarded
SPECIAL	Not Used
TIMES MULTI	# Of Times Multi-Ball Play Was Achieved

PERCENT OPTIONS

		FACTORY SETTINGS
THRESHOLD 1	Enter 0 thru 9,999,999 to set award level and display.	1,750,000
SELF PERCENT	Enter 0 or 1; 0 Disables Self-Percentaging Process and 1 Enables Self-Percentaging Process.	1
TARGET PERCENT	Enter desired percentage of replays awarded for reaching Threshold 1.	10
THRESHOLD 1 PERCENT	Displays actual percentage of replays awarded for reaching Threshold 1.	Unchanged
THRESHOLD 2	Enter 0 thru 9,999,999 to set award level and display.	4,500,000
THRESHOLD 3	Enter 0 thru 9,999,999 to set award level and display.	00
HIGHEST SCORE	Enter 0 thru 9,999,999 to set the Hi-Score replay level.	5,999,999

BASIC OPTION VALUES

CREDIT LIMIT	Enter 1 thru 40.	10
BALLS PER GAME	Enter 1 thru 5.	3
THRESHOLD MODE	Enter 0 thru 3; 0=0, 1=Points, 2=Extra Balls, & 3=Replays.	3
SPECIAL MODE	Enter 0 thru 3; 0=0, 1=Points, 2=Extra Balls, & 3=Replays.	3
HI-SCORE MODE	Enter 0 thru 3; 0=0, 1=1 Replay, 2=2 Replays, & 3=3 Replays.	3
SOUND MODE	Enter 0 thru 3; 0=Chimes W/O Background, 1=Chimes With Background, 2=Sounds W/O Background, & 3=Sounds With Background.	3
GERMAN PRIZE	German Meter	0
MATCH OPTION	Enter 0 or 1; 0 Disables Match and 1 Enables Match.	1
CREDIT DISPLAY	Enter 0 or 1; 0=No Credits Displayed & 1=Credits Displayed.	1
NO LIMIT REPLAYS	Enter 0 or 1; 0=Only 1 Award Per Game & 1=More Than 1 Per Game.	1
FREE PLAY	Enter 0 or 65; 0=Coins and 65=Free Play.	0
SLINGSHOT	Enter 0 or 1; 0=No Slingshots and 1-Slingshots.	1
TILT WARNING	Enter 0 thru 3; 0=No Warning, 1=1 Warning, 2=2 Warnings, & 3=3 Warnings.	1

FEATURE OPTIONS

RESET FACTORY — Enter 65 for factory selected scores and features.

RECALL TARGETS — Enter 0 or 1; This entry recalls DUST targets, SHIELD targets & SWORD targets.
*0 = No Memory 1 = Memory

X-BALL TIMER — Enter 0 thru 3; This entry controls length of time allowed to collect EXTRA BALL.

ENTER	LENGTH OF TIME	ENTER	LENGTH OF TIME
0	4 seconds	2	10 seconds
*1	6 seconds	3	16 seconds

DUNGEON TIMER — Enter 0 thru 3; This entry controls the length of time a particular DUNGEON LEVEL (or playfield multiplier) value is held before reverting to next lower value.

ENTER	LENGTH OF TIME	ENTER	LENGTH OF TIME
0	10 seconds	2	40 seconds
*1	20 seconds	3	60 seconds

RETAIN BALLS — Enter 0 thru 2; When game is over:
0 = One or both Teleport Drop Targets will eject held ball.
*1 = One Teleport Drop Target retains ball & other Teleport Drop Target ejects ball.
2 = Both Teleport Drop Targets retain held balls.

MULTI-BALL SAVERS — Enter 0 or 1; This entry controls whether or not the AUTO SAVER feature, for both MAGIC-SAVE lanes is activated each time multi-ball is achieved.
*0 = No AUTO SAVER 1 = AUTO SAVER

AUTO SAVER — Enter 0 thru 3; This entry controls level of game points beyond which AUTO SAVER feature is disabled.

ENTER	LEVEL OF GAME POINTS	ENTER	LEVEL OF GAME POINTS
0	None	*2	200,000
1	100,000	3	300,000

GATE ON TIMER — Enter 0 thru 7; This entry sets initial length of time (for each player) either Ball Saver gate remains closed after being manually activated. During game, this time length is also controlled by Control Gate Time Option. See note below.

ENTER	LENGTH OF TIME	ENTER	LENGTH OF TIME
0	0.83 Second	*4	1.50 Seconds
1	1.00 Second	5	1.66 Seconds
2	1.16 Seconds	6	1.83 Seconds
3	1.33 Seconds	7	2.00 Seconds

CONTROL GATE TIMER — Enter 0 thru 7; For each player, this entry controls length of time (along with Gate On Timer Option), either Ball Saver gate remains closed after being manually activated. See note below.

ENTER	BALL SAVER GATE ACTIVATED	ENTER	BALL SAVER GATE ACTIVATED
0	6 Times	4	14 Times
1	8 Times	5	16 Times
*2	10 Times	6	18 Times
3	12 Times	7	20 Times

ATTRACT SOUND — Enter 0 thru 1; After game is over, this entry enables or disables ATTRACT SOUND mode while displaying Hi-Scores and instructions.
0 = No Attract Sound *1 = Attract Sound

*Factory Setting .

NOTE: The Gate On Timer is initialized for each player at the beginning of the game (see the Gate On Timer Option above). The game counts the number of times the Ball Saver gates are activated by a particular player. If a match is found when compared to the number of times allowed, as set in the Control Gate Timer Option, the next lower time setting in the Gate Timer Option is selected. This information does not apply to the AUTO SAVER feature.

PRICING OPTIONS

CHUTE 1 OPTIONS
XX coin for yy credit; Coins (xx) will flash first. Enter 1 thru 99 coins. Next, the credits (yy) will flash. Enter 1 thru 10 credits. Then coins (xx) will flash again. Either press "ENTER," if the values are correct, or repeat the data entry.
CHUTE 1 BONUS; Enter 0 thru 40; 0 = No Awarded Bonus Credit and 1 thru 40 = The Number Of Credits At Which 1 Bonus Credit Will Be Awarded

CHUTE 2 OPTIONS
XX coin for yy credit; Coins (xx) will flash first. Enter 1 thru 99 coins. Next, the credits (yy) will flash. Enter 1 thru 10 credits. Then coins (xx) will flash again. Either press "ENTER," if the values are correct, or repeat the data entry.
CHUTE 2 BONUS; Enter 0 thru 40; 0 = No Awarded Bonus Credit and 1 thru 40 = The Number Of Credits at Which 1 Bonus Credit Will Be Awarded

CHUTE 3 OPTIONS
XX coin for yy credit; Coins (xx) will flash first. Enter 1 thru 99 coins. Next, the credits (yy) will flash. Enter 1 thru 10 credits. Then coins (xx) will flash again. Either press "ENTER," if the values are correct, or repeat the data entry.
CHUTE 3 BONUS; Enter 0 thru 40; 0 = No Awarded Bonus Credit and 1 thru 40 = The Number Of Credits at Which 1 Bonus Credit Will Be Awarded

Example:
To set Coin Chute 1 for 3 credits/2 coins (with no credits delivered on the first coin):
1. CHUTE 1 OPTIONS: Enter 02 coin for 03 credit.
2. CHUTE 1 BONUS: Enter 00.

To set Coin Chute 1 for 3 credits/2 coins (with one credit delivered on the first coin and two credits delivered on the second coin):
1. CHUTE 1 OPTIONS: Enter 01 coin for 01 credit.
2. CHUTE 1 BONUS: Enter 02.

If all 3 Chute Options and Bonus Registers are set the same, then all Chutes will work "together."

V. RECOMMENDED 3 & 5 BALL OPTION SETTINGS

	3-BALL	5-BALL
REPLAYS		
Special Mode	3	3
Match Option	1	1
High Score Mode	3	3
1st replay at	1,750,000	3,500,000
2nd replay at	4,500,000	7,000,000
X-BALL		
Special Mode	2	2
Match Option	0	0
High Score Mode	0	0
1st Extra Ball at	1,750,000	3,500,000
2nd Extra Ball at	4,500,000	7,000,000
NOVELTY		
Special Mode	1	1
Match Option	0	0
High Score Mode	0	0

HIGH GAME TO DATE (reset periodically)
3-BALL 5,999,999 5-BALL 9,999,999

DUNGEONS & DRAGONS OPTION SETTINGS

	3-BALL	5-BALL
FEATURE OPTIONS		
REGISTER		
RECALL TARGETS	0	1
X-BALL TIMER	1	0
DUNGEON TIMER	2	0
RETAIN BALLS	1	0
MULTI-BALL SAVERS	1	0
AUTO SAVER	2	1
GATE ON TIMER	4	4
CONTROL GATE TIMER	2	2
ATTRACT SOUND	1	1
In Basic Options:		
SLINGSHOT	1	1
TILT WARNING	1	1

VI. TROUBLESHOOTING ON LOCATION

SYMPTOM: GAME WON'T POWER-UP.
Game does not play power-up tune when power is turned on and the general illumination lamps are lit.

ACTION:
A. Check fuses on Power Module.
B. Turn power OFF. Open Backbox. Locate light emitting diode (LED) on 6803 Control Board.
C. Turn power ON. LED must flash 9X to indicate that the Control Board is good. Correct sequence is flash-pause-flash and then seven more flashes and then the LED goes out.
D. If LED does not come on or does not flash, or flashes, but less than 9X, turn off power. Check fuses. If fuses are good, replace the 6803 Control Board.

CAUTION: Replacement Control Board must have same Part Number or incorrect operation will result! See Parts List for Control Board on pages 2-13 thru 2-15 and EPROM Listing on page 2-33.

Turn power ON.

E. If game is correct, it is now ready for play. If game is not correct, contact the Bally-Midway Service Department.

SYMPTOM: LAMPS ARE ALWAYS ON OR ALWAYS OFF DURING GAME PLAY.

ACTION:
A. With power ON, open front door. Select SELF TEST-Lamp Tests with keyboard. If game is correct **all** feature lamps flash ON and OFF.
B. Carefully raise playfield or open backbox to gain access to lamps.
C. Replace bulbs that do not flash.
D. If game is correct, it is now ready for play.
E. If game is not correct, turn power OFF. Replace 6803 Control Board. Turn power ON and repeat step A.
F. If game is correct, it is now ready for play. If game is not correct, contact Bally-Midway Service Department.

SYMPTOM: DISPLAYS
I. Display digits improper on one or several, but less than all Display Driver Module(s). Improper: One or several segments always OFF, digits mottled (spotted), or several segments or digit(s) always ON.

ACTION:
A. With power ON, open front door. Select SELF TEST-Display Test with keyboard. If the game is correct, each digit on each Display displays the numbers 0 through 9 and the alphabet in all 7 digit positions in all displays. Note defective Display Driver Modules.
B. Turn power OFF.

WARNING: High Voltage is supplied to the Display Driver Modules from the Power Module. Wait a minimum of 30 seconds for High Voltage to bleed off before servicing modules.

C. Replace Display Driver Module(s). Turn power ON. Repeat step A.
D. If game is correct, it is now ready for play. If game is not correct, contact Bally-Midway Service Department.

II. **All** displays improper. Digit(s) are always ON or OFF/segment(s) are always ON or OFF on all displays.

ACTION:
A. With power ON, open front door. Select SELF TEST-Display Test with keyboard. If the game is correct, each digit on each Display displays the numbers 0 through 9 and the alphabet in all 7 digit positions. Note defective Display Driver Modules.
B. Replace 6803 Control Board. Turn power ON. Repeat step A.

CAUTION: Replacement Control Board must have same Part Number or incorrect operation will result! See Parts List for Control Board on pages 2-13 thru 2-15 and EPROM Listing on page 2-33.

C. If game is correct, it is now ready to play. If game is not correct, contact Bally-Midway Service Department.

III. One or several displays always OFF.

ACTION:
A. With power ON, open front door. Select SELF TEST-Display Test with keyboard. If the game is correct, each digit on each Display displays the numbers 0 through 9 and the alphabet in all 7 digit positions. Note defective Display Driver Modules.
B. Turn power OFF.
C. Replace Display Driver Module(s). Turn power ON. Repeat step A.
D. If game is correct, it is now ready for play. If game is not correct, contact Bally-Midway Service Department.

SYMPTOM: SOLENOIDS

I. One or more solenoids do not pull-in during game play.

ACTION:

A. With power ON, open front door. Select SELF TEST-Solenoid Test with keyboard.
B. If game is correct, each solenoid should be energized in sequence. The solenoid name appears with the Driver (Q) Number and connector jack with pin numbers. (NOTE: If most of the Playfield Solenoids DO NOT operate, check the Playfield Fuse to see if it is blown. It is generally found near the Flipper Assemblies on the bottom of the Playfield.)
C. Carefully lift the Playfield to gain access to the solenoid. Turn power OFF. Inspect the solenoid.
D. If a lead is broken off, repair. Repeat steps A & B. If game is correct, it is now ready for play. If solenoid wiring was correct, turn power OFF.
E. Replace 6803 Control Board. See CAUTION NOTE on page 1-7.
F. Repeat steps A & B. If game is correct, it is now ready to play. If game is not correct, turn power OFF.
G. Replace Sound Module A8.
H. Repeat steps A & B. If game is correct, it is now ready to play. If game is not correct, contact the Bally-Midway Service Department.

II. Solenoid(s) always energized. **NOTE:** If momentary solenoids (ball ejects, slingshots, thumper-bumpers, etc.) are energized continuously, they are subject to damage. Limit troubleshooting to one minute with power ON, followed by **five minutes with power OFF.** Repeat as necessary. Replace damaged solenoids. NOTE: When troubleshooting Playfield Solenoid Circuits, be advised that a constantly energized Solenoid (i.e. Thumper-Bumper) will blow the Playfield Fuse in a few seconds. To avoid replacing the Playfield Fuse repeatedly, try to isolate the faulty Solenoid Circuit as soon as the game power switch is flipped ON.

ACTION:

A. With power ON, open front door. Select SELF TEST-Solenoid Test with keyboard.
B. If game is correct, each solenoid should be energized in sequence. The solenoid name appears with the Driver (Q) Number and connector jack with pin numbers. NOTE: If most of the Playfield Solenoids DO NOT operate, check the Playfield Fuse to see if it is blown. It is generally found near the Flipper Assemblies on the bottom of the Playfield.
C. Carefully lift the Playfield to gain access to the solenoid. Turn power OFF. Inspect the solenoid.
D. If a lead is broken off, repair. Repeat steps A & B. If game is correct, it is now ready for play. If Solenoid wiring was correct, turn power OFF.
E. Replace 6803 Control Board. See CAUTION NOTE below.
F. Repeat steps A & B. If game is correct, it is now ready to play. If game is not correct, turn power OFF.
G. Replace Sound Module A8.
H. Repeat steps A & B. If game is correct, it is now ready to play. If game is not correct, contact the Bally-Midway Service Department.

SYMPTOM: NO SOUND

ACTION:

A. With power ON, open front door. Select SELF TEST-Sound Test with the keyboard.
B. Turn volume control clockwise to the maximum position.
C. If correct, sound will be heard. If incorrect, try seating speaker lead connector (J2) and input connector (J1) on the Sound Board.
D. If correct, sound will be heard. If incorrect, contact the Bally-Midway Service Department.

SYMPTOM: SWITCHES

Feature (Drop Targets, Stand-up Targets, etc.) does not score.

ACTION:

A. With power ON, open front door. Select SELF TEST-Switch Test with the keyboard.
B. If the game is correct, "All Switches Open" is displayed. Otherwise, the name of the switch(es) will be displayed with jack and pin numbers.
C. Carefully lift the Playfield. Locate the switch assembly identified from the display. Visually inspect the switch assembly. If the contacts are stuck, re-gap them to 1/16". Repeat steps A & B. If the game is correct, it is now ready to play. If the game is not correct, turn power OFF.
D. Replace the 6803 Control Board.
E. Repeat steps A & B. If game is correct, it is now ready to play. If game is not correct, contact the Bally-Midway Service Department.

CAUTION: Replacement 6803 Control Board must have same Part Number or incorrect operation will result! See Parts List for Control Board on pages 2-13 thru 2-15.

SUBJECT: 6803 CONTROL BOARD POWER-UP TEST SEQUENCE

The following is an abbreviated self-test routine for the 6803 Control Board.

1st Flash—Determines if the internal RAM U1 is good. (6803)

2nd Flash—Checks to see if the program ROM U2 is good. (27128)

3rd Flash—Checks to see if the program ROM U3 is good. (27128)

4th Flash—Checks the C-MOS RAM U4. (6116P-3)

5th Flash—Tests U8 PIA-0. (6821)

6th Flash—Tests U7 PIA-1. (6821)

7th Flash—Checks the internal display interrupt generator U1. (6803)

8th Flash—Verifies U12 and U8 operation of the phase B switched illumination voltage. NOTE: Fuse F5 on the Power Module provides the phase B signal to the Control Board for U12 and U8.

9th Flash—Verifies U1, U11, and U12 operation of the phase A switched illumination voltage. NOTE: Fuse F4 on the Power Module provides the phase A signal to the Control Board for U1, U11, and U12.

SUBJECT: SOUND BOARD SELF-TEST SEQUENCE

The following is an abbreviated self-test routine for the 6809 Sound Board.

1st Flash—Determine if the external ROM U7 is good.

2nd Flash—Checks to see if the external RAM U6 is good.

3rd Flash—Checks the PIA U8.

The following is an abbreviated self-test routine for the Sounds Deluxe (68000) Board:

1st Flash—Determines if the ROM U11 is good.

2nd Flash—Determines if the ROM U12 is good.

3rd Flash—Determines if the ROM U13 is good.

4th Flash—Determines if the ROM U14 is good.

5th Flash—Checks to see if the RAM U9 and U10 is good.

6th Flash—Checks the PIA U7.

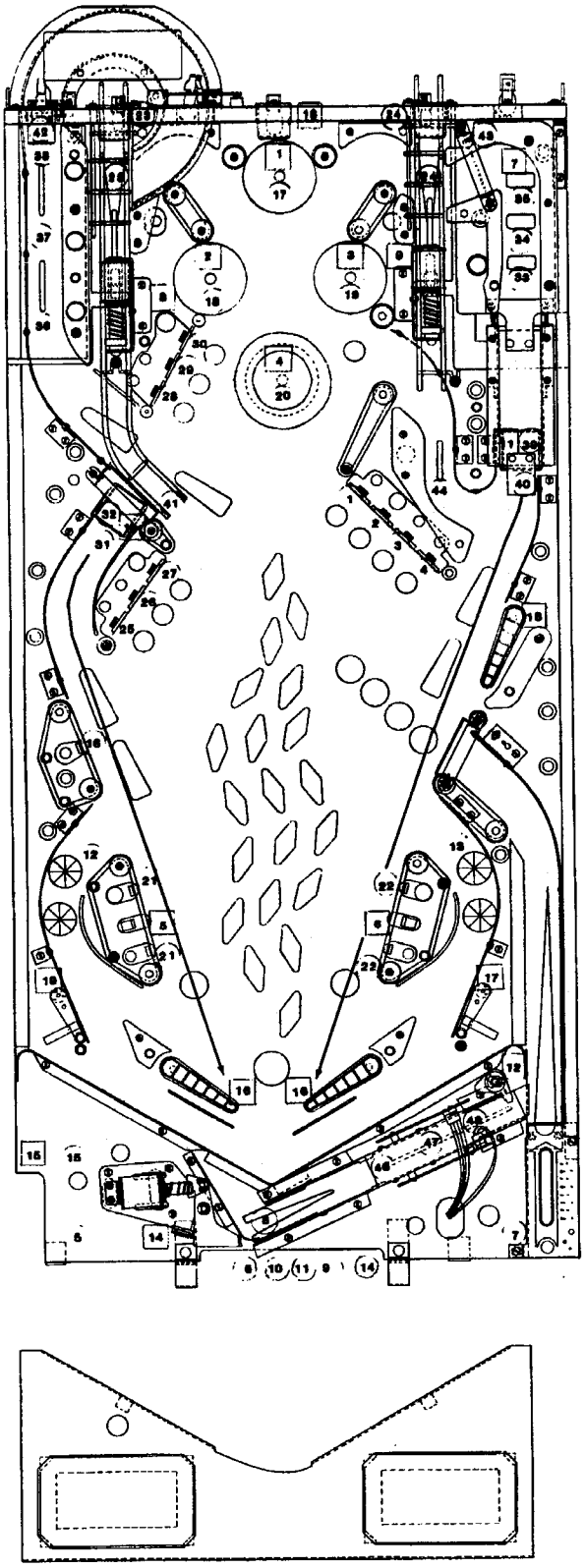

FIGURE II a

VII
OH06 DUNGEONS & DRAGONS

SOLENOID IDENTIFICATION TABLE

SELF TEST #	SEQUENCE
1	TOP THUMPER BUMPER
2	LEFT THUMPER BUMPER
3	RIGHT THUMPER BUMPER
4	BOTTOM THUMPER BUMPER
5	LEFT SLINGSHOT
6	RIGHT SLINGSHOT
7	RESET DROP TARGET
8	KICKER LEFT
9	KICKER RIGHT
10	TELEPORT LEFT
11	TELEPORT RIGHT
12	KICK TO PLAYFIELD
13	RESERVED FOR GERMAN USE
14	OUTHOLE
15	KNOCKER
16	FLEXSAVE RIGHT (RIGHT GATE)
17	FLEXSAVE LEFT (LEFT GATE)
18	FLIPPER

SWITCH ASSEMBLY IDENTIFICATION TABLE

SELF TEST #	SEQUENCE
1	DUST 1 LEFT (TARGET)
2	DUST 2 (TARGET)
3	DUST 3 (TARGET)
4	DUST 4 RIGHT (TARGET)
5	CABINET LEFT
6	CREDIT (CABINET)
7	CABINET RIGHT
8	OUTHOLE
9	COINS RIGHT (DOOR)
10	COINS LEFT (DOOR)
11	COINS MIDDLE (DOOR)
12	LEFT RETURN LANE
13	RIGHT RETURN LANE
14	SLAM (DOOR)
15	TILT (CABINET)
16	REBOUND
17	TOP BUMPER
18	LEFT BUMPER
19	RIGHT BUMPER
20	BOTTOM BUMPER
21	LEFT SLINGSHOT (X2)
22	RIGHT SLINGSHOT (X2)
23	DRAGON LAIR LEFT
24	DRAGON LAIR RIGHT
25	SHIELD 1 LEFT (TARGET)
26	SHIELD 2 MIDDLE (TARGET)
27	SHIELD 3 RIGHT (TARGET)
28	SWORD 1 LEFT (TARGET)
29	SWORD 2 MIDDLE (TARGET)
30	SWORD 3 RIGHT (TARGET)
31	TELEPORT LEFT EMPTY
32	TELEPORT LEFT LOADED
33	DROP TARGET BOTTOM
34	DROP TARGET MIDDLE
35	DROP TARGET TOP
36	SKILL 1 BOTTOM
37	SKILL 2 MIDDLE
38	SKILL 3 TOP
39	TELEPORT RIGHT EMPTY
40	TELEPORT RIGHT LOADED
41	LEFT RETURN LANE
42	LEVEL SWITCH
43	MILLION SWITCH
44	RESTORE WEAPONS
45	NOT USED
46	OUTHOLE 1 LEFT
47	OUTHOLE 2 MIDDLE
48	OUTHOLE 3 RIGHT

***NOTE:** SEQUENCE NUMBERS SHOWN HERE ARE USED AS AN AID IN LOCATING FACULTY SOLENOID OR SWITCH ON FIGURE IIa.

***NOTE:** BALL EJECT VECTOR SHOWN FOR EACH TELEPORT DROP TARGET ASSEMBLY. BALL WILL EXIT AS INDICATED ON FIGURE IIa.

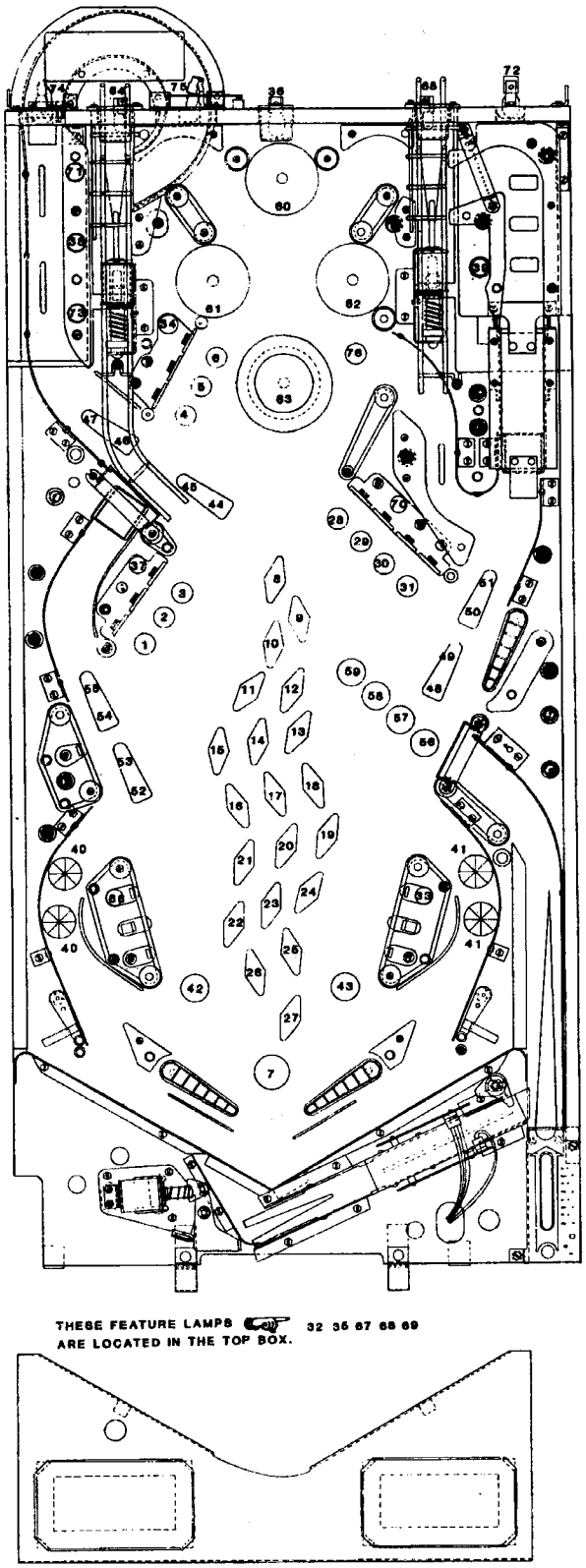

FIGURE II b

VIII
FEATURE LITES IDENTIFICATION TABLE

SEQUENCE	DESCRIPTION
1	SHIELD 1 LEFT
2	SHIELD 2 MIDDLE
3	SHIELD 3 RIGHT
4	SWORD 1 LEFT
5	SWORD 2 MIDDLE
6	SWORD 3 RIGHT
7	EXTRA LIFE (BACK PANEL)
8	FLAME 20K
9	FLAME 19K
10	FLAME 18K
11	FLAME 17K
12	FLAME 16K
13	FLAME 15K
14	FLAME 14K
15	FLAME 13K
16	FLAME 12K
17	FLAME 11K
18	FLAME 10K
19	FLAME 9K
20	FLAME 8K
21	FLAME 7K
22	FLAME 6K
23	FLAME 5K
24	FLAME 4K
25	FLAME 3K
26	FLAME 2K
27	FLAME 1K
28	DUST 1 LEFT
29	DUST 2
30	DUST 3
31	DUST 4 RIGHT
32	*BRITE LEFT FLASH (TOP BOX)
33	*BRITE RIGHT SLINGSHOT
34	*BRITE SWORD
35	*BRITE DRAGON 3 (TOP BOX)
36	*BRITE MILLION
37	*BRITE SHIELD
38	*BRITE MIDDLE SKILL
39	*BRITE DROP TARGETS
40	LEFT RETURN
41	RIGHT RETURN
42	FLAME 2X
43	FLAME 3X
44	RESTORE SWORD BOTTOM
45	RESTORE SWORD TOP
46	ADVANCE LEVEL BOTTOM
47	ADVANCE LEVEL TOP
48	RESTORE DUST BOTTOM
49	RESTORE DUST TOP
50	TELEPORT RIGHT BOTTOM
51	TELEPORT RIGHT TOP
52	RESTORE SHIELD BOTTOM
53	RESTORE SHIELD TOP
54	TELEPORT LEFT BOTTOM
55	TELEPORT LEFT TOP
56	DUNGEON LEVEL 2
57	DUNGEON LEVEL 3
58	DUNGEON LEVEL 4
59	DUNGEON LEVEL 5
60	BUMPER TOP
61	BUMPER LEFT
62	BUMPER RIGHT
63	BUMPER BOTTOM
64	DRAGONS LAIR LEFT
65	DRAGONS LAIR RIGHT
66	*BRITE LEFT SLINGSHOT
67	*BRITE RIGHT FLASH (TOP BOX)
68	*BRITE DRAGON 1 (TOP BOX)
69	*BRITE DRAGON 2 (TOP BOX)
70	*BRITE DUST
71	*BRITE TOP SKILL
72	*BRITE EXTRA BALL @ (EXTRA LIFE)
73	*BRITE BOTTOM SKILL
74	SKILL HELP LEFT
75	SKILL HELP RIGHT
76	RESTORE WEAPONS

* = BRITE LITE LOCATIONS
@ = SHOOT-AGAIN

GENERAL ILLUMINATION LITES IDENTIFICATION

NOTE: THERE ARE 27 LOCATIONS IDENTIFIED BY A "SHADED CIRCLE" ON ILLUSTRATION IIb.

IX. ROUTINE MAINTENANCE ON LOCATION:

After successful completion of the Self Diagnostic Test Procedure, set the game up for play. Exercise each roll-over, thumper bumper, slingshot, etc., with a game ball until each switch assembly on the Playfield has been checked for proper operation. If actuating a switch assembly results in intermittent or no response, clean contacts by gently closing them on a clean business card or piece of paper and wiping until the contacts are wiped clean. Re-gap, if necessary to 1/16". Do not burnish or file gold plated switch contacts.

X. SWITCH ASSEMBLY ADJUSTMENTS:

GENERAL:
All switch assemblies consist of leaf springs, contacts, separators, plastic tubing and screws to hold them to the mounting surface. Before attempting to adjust a switch assembly, make sure that these screws are tight. If not, tighten screw closest to the contact end of the leaf spring first. This will prevent the assembly from being secured in such a manner that the leaf springs tend to fan out. In general, all leaf springs are adjusted for a 1/16" gap between contacts in the open position and .010" over-travel or wipe in the closed position. All contacts should be free of dust and dirt. Contacts, with the exception of the flipper button switch assemblies, are plated to resist corrosion. Filing or burnishing breaks the finish and encourages corrosion. Clean contacts by gently closing them on a clean business card or piece of paper and wiping until the contacts are wiped clean.

For the flipper button switch assemblies **ONLY:** Tarnish can be removed with a contact file followed by a burnishing tool. Severely pitted contacts must be placed and adjusted only when they are found to be a source of game malfunction.

XI. SERVICE HINTS:

The Bally Playfield has an improved tuff-coat finish with excellent wearing properties. Life expectancy of the Playfield as well as play appeal, can be extended by periodic cleaning.

DO: Bally recommends you clean your Playfield with Wildcat #125 (Wildcat Chemical Co., 1349 East Seminary Drive, Fort Worth, Texas 76115; Phone 1-817-924-8321). Wildcat #125 is a combination cleaner and polish. Bally has tried and tested this product and found it to be very effective. If Wildcat #125 is not available, Bally suggests you ask your distributor to order it. Inspect and hand polish the ball in a clean cloth. A chipped ball must be replaced. It can ruin the finish on the playfield in a short period of time.

DON'T: Use water in large quantities, highly caustic cleaners, abrasive cleaners and cleaning pads on the playfield, or allow a wax or polish build up. Waxes yellow with age and spoil appeal.

XII
OH06 DUNGEONS & DRAGONS

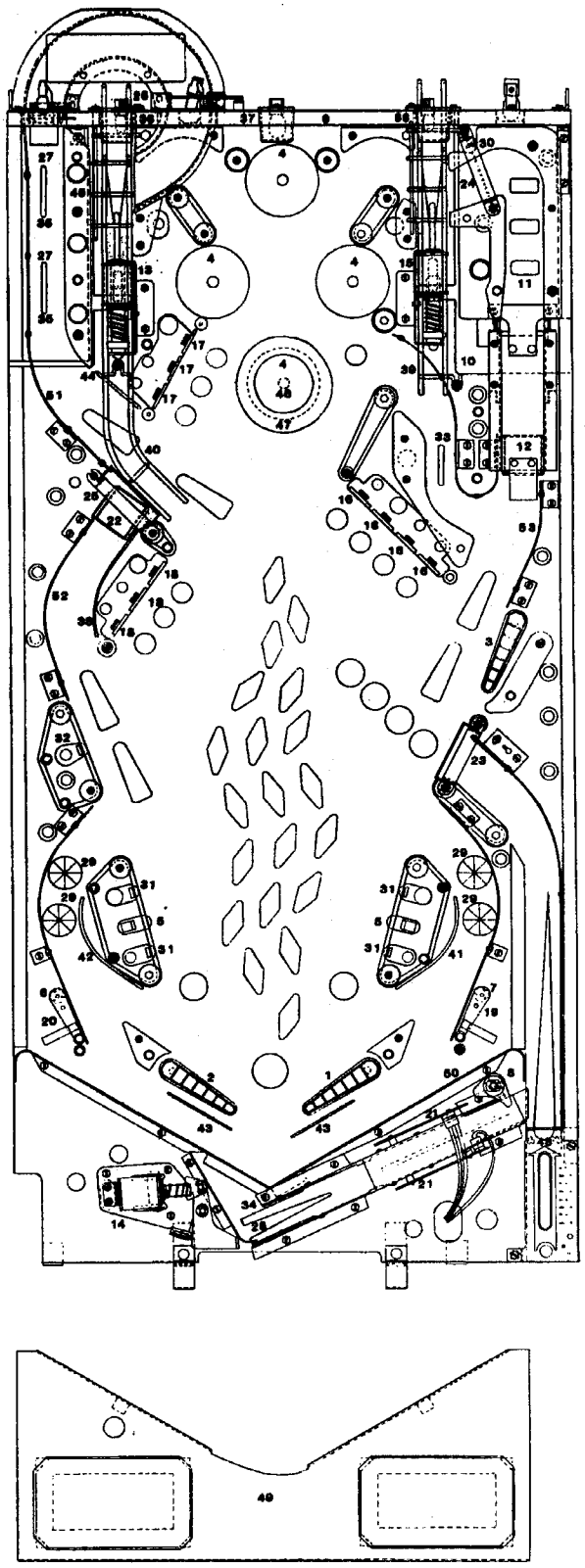

FIGURE II c

PANEL TOP PARTS

1.	FLIPPER ASSEMBLY SINGLE SWITCH RIGHT	AC70-00022-0100
2.	FLIPPER ASSEMBLY SINGLE SWITCH LEFT	AC70-00022-0200
3.	FLIPPER ASSEMBLY DOUBLE SWITCH RIGHT	AC70-00023-0100
4.	THUMPER BUMPER ASSEMBLY	A967-00053-0100
5.	SLINGSHOT KICKER ASSEMBLY LEFT & RIGHT	A967-00059-0000
6.	BALL SAVER ASSEMBLY LEFT	AE94-00040-0000
7.	BALL SAVER ASSEMBLY RIGHT	AE94-00041-0000
8.	MULTI-BALL KICKER ASSEMBLY	AH01-00027-0000
9.	BACKBOARD ASSEMBLY	AH06-00009-0000
10.	TOP PLATFORM ASSEMBLY	AH06-00024-0000
11.	DROP TARGET ASSEMBLY 3 IN-LINE	AH06-00042-0000
12.	TELEPORT DROP TARGET ASSEMBLY	A365-00374-0100
13.	KNOCKER ASSEMBLY 2-LUG LEFT	AH06-00045-0000
14.	TOP MOUNTED KICKER ASSEMBLY	A360-00234-0000
15.	KNOCKER ASSEMBLY 2-LUG RIGHT	A360-00235-0000
16.	TARGET, SWITCH, BRACKET, DIODE, & CAP: YELLOW; LUG RIGHT	A365-R0306-F113
17.	TARGET, SWITCH, BRACKET, DIODE, & CAP: RED; LUG RIGHT	A365-R0307-F111
18.	TARGET, SWITCH, BRACKET, DIODE, & CAP: BLUE; LUG RIGHT	A365-R0307-F112
19.	SHAFT W/ARM & STUD ASSEMBLY: RIGHT	A365-00321-0100
20.	SHAFT W/ARM & STUD ASSEMBLY: LEFT	A365-00321-0200
21.	OPTICAL MULTI-BALL TROUGH ASSEMBLY	A365-00347-0100
22.	TELEPORT DROP TARGET ASSEMBLY	A365-00374-0100
23.	GATE, BRACKET & WIRE FORM ASSEMBLY	AA40-00034-0000
24.	GATE, BRACKET & WIRE FORM ASSEMBLY	A360-00214-0000
25.	GATE, BRACKET & WIRE FORM ASSEMBLY	AH06-00025-0000
26.	WIRE-TO-MOUNTING BRACKET ASSEMBLY	AH06-00021-0000
27.	BRACKET W/WIRE FORM ASSEMBLY: ROLLOVER LEFT	A331-00042-0000
28.	BRACKET W/WIRE FORM ASSEMBLY: ROLLOVER LEFT	A360-00217-0000
29.	SWITCH ASSEMBLY: ROLLOVER W/DIODE & CAP	A020-00095-0111
30.	SWITCH ASSEMBLY: GATE W/DIODE & CAP	A020-00094-0111
31.	SWITCH W/BRACKET & PLATE ASSEMBLY: SLINGSHOT	A360-00230-0000
32.	SWITCH/BRACKET & DIODE ASSEMBLY: REBOUND	A360-00239-0000
33.	SWITCH W/DIODE & CAP ASSEMBLY	A360-00603-0002
34.	SWITCH W/DIODE & PLATE ASSEMBLY	A365-00034-0000
35.	SWITCH W/DIODE & PLATE ASSEMBLY	A365-00035-0000
36.	LIGHT DOME: PLASTIC, BLUE	0017-00042-0742
37.	LIGHT DOME: PLASTIC, CLEAR	0017-00042-0745
38.	WIRE FORM: LEFT BALL CAPTURE	OH06-00905-0000
39.	WIRE FORM RAMP UNIT: RIGHT	OH06-00910-00XF
40.	WIRE FORM RAMP UNIT: LEFT	OH06-00911-00XF
41.	WIRE FORM: INSIDE DRAIN RIGHT	OH06-00913-0100
42.	WIRE FORM: INSIDE DRAIN LEFT	OH06-00913-0200
43.	WIRE FORM: BALL GUIDE	0360-00175-5300
44.	WIRE FORM: BALL GUIDE	0365-00151-2000
45.	PLATE: LEFT RAMP ENTRANCE	OH06-00134-0000
46.	CAP: THUMPER BUMPER, AMBER	0017-00042-0520
47.	COLLAR: THUMPER BUMPER, RED	0017-00042-0566
48.	SHOOTER GAUGE	OH06-00100-00XF
49.	BOTTOM ARCH	OH06-00921-0000
50.	BOTTOM ARCH EXTENSION	0370-00918-1000
51.	LEFT RAMP ENTRANCE ASSEMBLY	AH06-00048-0000
52.	SCOOP: LEFT BALL CAPTURE	OH06-00104-0000
53.	RIGHT BALL CATCH ASSEMBLY	AH06-00029-0000

XIII
OH06 DUNGEONS & DRAGONS

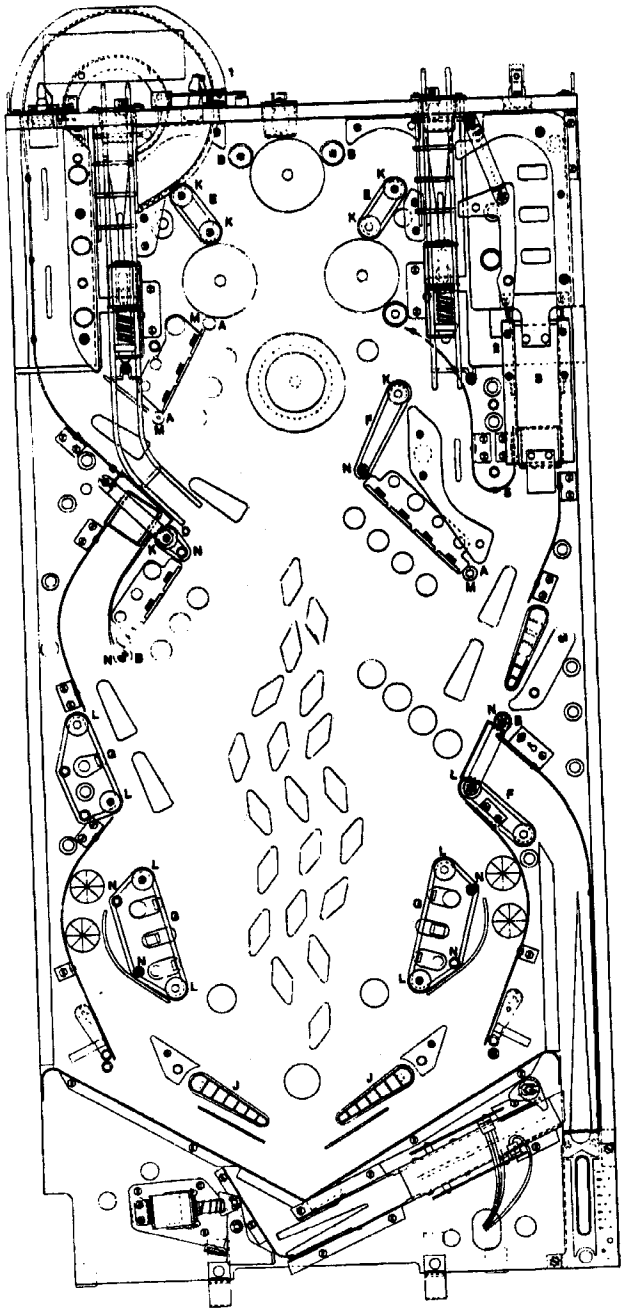

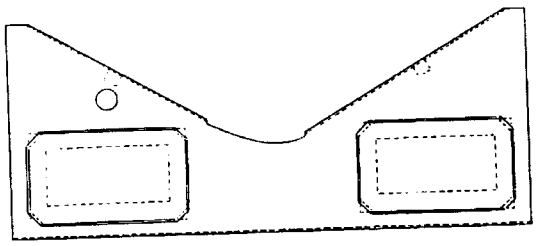

FIGURE II d

RAMP PARTS

1.	PLATE-TO-CIRCLE RAMP ASSEMBLY	AH06-00028-0000
2.	STRAIGHT RAMP PIVOT ASSEMBLY	AH06-00022-0000
3.	PLATES-TO-STRAIGHT RAMP ASSEMBLY	AH06-00023-0000
4.	WOOD RAMP ASSEMBLY	AH06-00027-0000
5.	THUMPER BUMPER EXIT, RAMP ENTRANCE ASSEMBLY: RIGHT	AH06-00050-0000

RUBBER RINGS

A.	RING	0017-00041-0633
B.	RING: 5/16"	0017-00041-0637
C.	RING: .23"	0017-00041-0641
D.	RING: 3/4"	0017-00041-0642
E.	RING: 1"	0017-00041-0643
F.	RING: 1-1/2"	0017-00041-0644
G.	RING: 2-1/2"	0017-00041-0646
J.	RING: 3" (RED)	0017-00041-0682

POST

K.	POST: (BLUE) PLASTIC 1"	0017-00042-0586
L.	POST: (BLUE) PLASTIC 1-3/16"	0017-00042-0594
M.	POST: METAL-MINI (W/THREADS FOR 10/32 NUT)	0365-00700-00XF
N.	POST: 3/8" x 1-3/16"	0365-00980-0000

RUBBER BUMPER USE

M.–POST: METAL-MINI	0017-00041-0633
K. & L.–POST: (BLUE) PLASTIC	0017-00041-0637

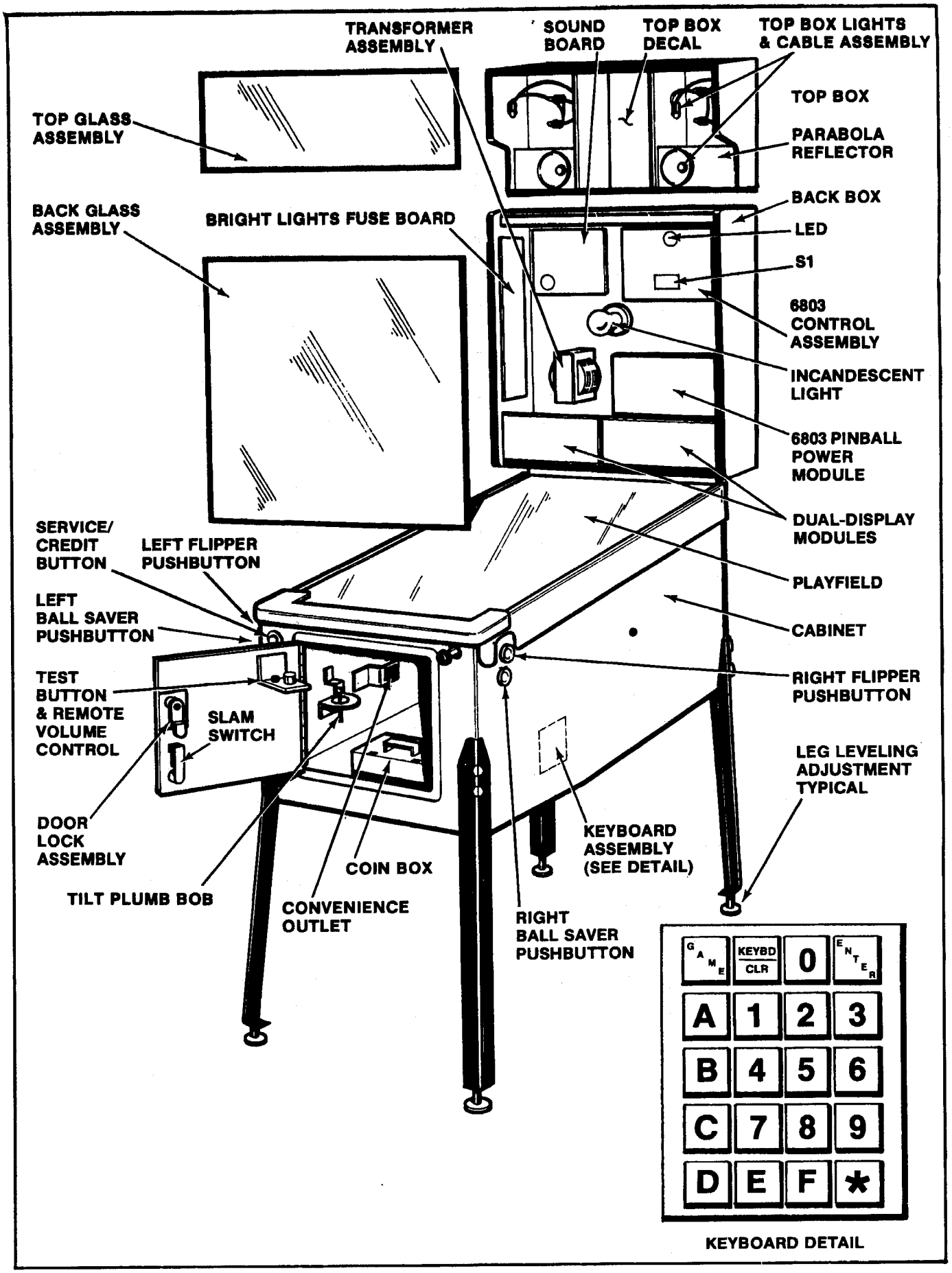

FIGURE III. DUNGEONS AND DRAGONS PINBALL GAME

XIV. DUNGEONS & DRAGONS FEATURE OPERATION & SCORING

1. SHOOTER LANE SKILL SHOT FEATURE

When a ball is delivered to the plunger in the shooter lane, a flashing "100 K" light at the left end of the backboard will turn on. The shooter lane SKILL SHOT, which awards 100,000 points, can be made as follows:

1. Shoot the ball with the plunger into the upper left inclined lane.
2. The ball must pass thru the backboard entrance gate (located under the "100 K" light) which makes a switch.
3. The ball must then roll back down the inclined lane.

However, if the ball continues to roll thru a circular plastic ramp (hidden behind the backboard) and then passes thru a backboard exit gate (which breaks a switch), the 100,000 points will not be awarded.

The inclined lane has two rollover switches. Making each rollover switch awards 5,000 points. Making the backboard entrance gate switch awards 5,000 points.

If the SKILL SHOT off the plunger is unsuccessful, the "100 K" light will continue to flash until points are scored anywhere on the playfield. At that time, the "100 K" light turns off.

2. DUNGEON LEVEL FEATURE

The DUNGEON LEVEL (playfield multiplier) value can be increased by hitting the ball with the upper right Flipper as follows:

1. The ball rolls up the left inclined lane making two (2) rollover switches.
2. The ball makes the backboard entrance gate switch (located under the "100 K" light).
3. The ball passes thru the circular plastic ramp which is hidden behind the backboard.
4. The ball breaks the backboard exit gate switch with the ball rolling back to the playfield via the left DRAGON'S LAIR wire ramp.

Each time the above ramp shot is made, the playfield multiplier values and game points are awarded as follows:

FIGURE 1. DUNGEON LEVELS: COMPLETIONS & AWARDS

DUNGEON LEVEL RAMP COMPLETION	DUNGEON LEVEL LIGHT LIT	PLAYFIELD MULTIPLIER VALUE AWARD	ROLLOVER SWITCHES AWARD	BACKBOARD GATE SWITCHES AWARD	TIME ALLOWED FOR RAMP COMPLETIONS°
1st time	2X	2X	10,000 points	10,000 points	20 seconds
2nd time	3X	3X	10,000 points	10,000 points	20 seconds
3rd time	4X	4X	10,000 points	10,000 points	20 seconds
4th time	5X	5X	10,000 points	10,000 points	20 seconds

*Adjustable—°See **REGISTER "DUNGEON TIMER"** for adjustment times below.

NOTES:

1. If successive DUNGEON LEVEL ramp completions fall behind the set time limit, the playfield multiplier value will decrease in steps.
2. Making each rollover switch in the left inclined lane awards 5,000 points.
3. Making the backboard entrance gate switch awards 5,000 points.
4. Breaking the backboard exit gate switch awards 5,000 points.
5. The maximum DUNGEON LEVEL (playfield multiplier) value awarded is 5X.
6. Each time the DUNGEON LEVEL ramp is completed (the first four times), the DUNGEON LEVEL (playfield multiplier) value appears on the display.

°The time allowed to advance the DUNGEON LEVEL to the next higher value, before it reverts to the next lower value, is adjustable using one of the following settings:

REGISTER	SETTING	FUNCTION
DUNGEON TIMER	0	10 Seconds To Advance DUNGEON LEVEL
DUNGEON TIMER	1	20 Seconds To Advance DUNGEON LEVEL
DUNGEON TIMER	2	40 Seconds To Advance DUNGEON LEVEL
DUNGEON TIMER	3	60 Seconds To Advance DUNGEON LEVEL

3. DRAGON'S FLAME BONUS FEATURE

The DRAGON'S FLAME consists of twenty (20) diamond-shaped lights "1K" thru "20K" with respective bonus point values of 1,000 points thru 20,000 points. Each successive DRAGON'S FLAME "portion" is "extinguished" (each light turns off) by hitting a lit target in any of the three (3) Weapon Target groups. Weapon Target descriptions and points awarded are shown in Figure 2.

FIGURE 2. WEAPON TARGETS: DESCRIPTIONS & POINTS AWARDED

WEAPON EXTINGUISHES FLAME	WEAPON TARGET COLOR	NUMBER OF TARGETS	AWARD PER WEAPON TARGET HIT	
			LIT*	UNLIT
DUST	Yellow	4	5,000 points	3,000 points
SHIELD	Blue	3	5,000 points	3,000 points
SWORD	Red	3	5,000 points	3,000 points

*An extra 5,000 points is awarded when all of the lit targets are hit in any Weapon Target group.

When all of the targets are unlit in any one of the three (3) Weapon Target groups, the RESTORE ALL WEAPONS light, located on the right side of the bottom thumper bumper, turns on. Making the rollover switch in the RESTORE ALL WEAPONS lane, located below the right DRAGON'S LAIR wire ramp, will re-light all unlit Weapon Targets.

When all of the DUST targets are completed (all are unlit), the "RESTORE DUST" light in front of the right TELEPORT lane flashes on. All unlit DUST targets are re-lit by:

1. Having the ball enter the right TELEPORT lane while the right "TELEPORT" light is flashing. See "TELEPORT FEATURE" on page 1-20.
2. Hitting the first, second or third BELL TOWER in-line drop target or by making its rear gate switch. See "BELL TOWER FEATURE" on page 1-18.

When all of the SHIELD targets are completed (all are unlit), the "RESTORE SHIELD" light in front of the left TELEPORT flashes on. Entering the left TELEPORT lane will re-light all of the unlit SHIELD targets. See "TELEPORT FEATURE" on page 1-20.

When all of the SWORD targets are completed (all are unlit), the "RESTORE SWORD" light in front of the upper left inclined lane flashes on. Having the ball enter the inclined lane and make the first of two (2) rollover switches will re-light all of the unlit SWORD targets.

By hitting the °Weapon Targets, the DRAGON'S FLAME can be repeatedly extinguished until regular game points, instead of bonus points, are earned. Each time all twenty (20) DRAGON'S FLAME lights are turned off, the DRAGON'S FLAME is completely extinguished. This ends the first completion round. All twenty (20) lights will then immediately re-light. At the same time, the "2X FLAME" light turns on which tells the player to begin the second DRAGON'S FLAME completion round. Figure 3 shows the completion round sequence.

FIGURE 3. DRAGON'S FLAME COMPLETION ROUND SEQUENCE

DRAGON'S FLAME COMPLETELY EXTINGUISHED	NEXT FLAME COMPLETION ROUND IN PROGRESS	
	"2X FLAME" LIGHT	"3X FLAME" LIGHT
	Off	Off
1st time	On	Off
2nd time	Off	On
3rd time	Off	On
4th time	On	On
5th time	On	On

All of the DRAGON'S FLAME lights will re-light after every completion throughout the rest of the game.

For every DRAGON'S FLAME light turned off, its bonus point value accumulates until after the fifth completion and is awarded when:

1. The left DRAGON'S LAIR or the right DRAGON'S LAIR (see the DRAGON'S LAIR FEATURE on page 1-20) is entered, whether either DRAGON'S LAIR is lit or unlit.
2. The ball drains thru the outhole.

However, after the fifth completion of the DRAGON'S FLAME, the FLAME value points will accumulate **only** as regular game points and will be awarded each time immediately upon completion of all twenty (20) DRAGON'S FLAME lights.

°The DUST targets, SHIELD targets and SWORD targets can be cleared or saved at the end of each ball using one of the following settings:

REGISTER	SETTING	FUNCTION
RECALL TARGETS	0	No, do not recall all Weapon Targets from ball to ball.
RECALL TARGETS	1	Yes, recall all Weapon Targets from ball to ball.

4. BELL TOWER FEATURE & EXTRA LIFE FEATURE

The BELL TOWER can be entered only when its movable ramp is in a lowered position. This happens only after the right Teleport Drop Target captures a ball. See the "TELEPORT FEATURE" on page 1-20.

Before the ball passes thru the rear gate which makes a switch, three (3) in-line drop targets must be hit in succession. Points and an EXTRA BALL are awarded as shown in Figure 4:

FIGURE 4. BELL TOWER AWARD SEQUENCE

BELL TOWER	1ST DROP TARGET HIT	2ND DROP TARGET HIT	3RD DROP TARGET HIT	REAR GATE SWITCH MADE
POINTS AWARDED	10,000 points	25,000 points	50,000 points	100,000 points
DURING 1ST BALL			Qualifies EXTRA LIFE & starts X-BALL TIMER	If within time limit, collects EXTRA LIFE*
DURING 2ND BALL		Qualifies EXTRA LIFE & starts X-BALL TIMER	If within time limit, collects EXTRA LIFE*	
DURING 3RD BALL	Qualifies EXTRA LIFE & starts X-BALL TIMER	If within time limit, collects EXTRA LIFE*		

*Adjustable—°See **REGISTER "X-BALL TIMER"** below.

NOTES:

1. "EXTRA LIFE" = EXTRA BALL
2. The "EXTRA LIFE" qualify light is located at the right end of the backboard.
3. The "EXTRA LIFE" collect light is located above the outhole.
4. If an EXTRA LIFE is earned at one ball level, the **same** EXTRA LIFE scoring requirements are repeated at the next higher ball level.

Passing the ball thru the BELL TOWER rear gate qualifies the MILLION SHOT. See the "MILLION SHOT FEATURE" below.

°The length of time given to collect EXTRA LIFE is adjustable by using one of the following settings:

REGISTER	SETTING	FUNCTION
X-BALL TIMER	0	Length of time is 4 seconds.
X-BALL TIMER	1	Length of time is 6 seconds.
X-BALL TIMER	2	Length of time is 10 seconds.
X-BALL TIMER	3	Length of time is 16 seconds.

5. MILLION SHOT FEATURE

Passing the ball thru the BELL TOWER rear gate qualifies the MILLION SHOT (see the "BELL TOWER FEATURE & EXTRA LIFE FEATURE" above). This activates a flashing "MILLION" light located at the center of the backboard. A timer is also activated allowing 3 seconds to make the MILLION SHOT. The ball must travel up the upper left inclined lane, thru the pastic ramp located behind the backboard) making the backboard entrance ramp gate switch and also breaking the backboard exit gate switch to collect 1,000,000 points. The MILLION SHOT is re-qualified each time the ball passes thru the BELL TOWER rear gate.

6. MAGIC SAVE FEATURE & AUTO SAVER FEATURE

Two "MAGIC-SAVE" (flex-save) lanes are in this game. Two rollover buttons are in each one of these combination return/out lanes. Each lane contains a flexible spring steel ball guide which can be moved to a closed position by a Ball Saver gate. This occurs when the lamps are lit under the rollover buttons. The left Ball Saver gate is manually activated with a push-button located under the left Flipper push-button on the Cabinet. The right Ball Saver gate is manually activated with a push-button located under the right Flipper push-button. When either Ball Saver gate is manually activated, its respective lane changes from being an "outlane" to a "return lane" for a fixed length of time (adjustable—°see **REGISTER "GATE ON TIMER"** and **REGISTER "CONTROL GATE TIMER"**) after which it returns to being an "outlane."

Whenever the two rollover button lights are flashing in either Ball Saver lane and the ball passes over both buttons, the AUTO SAVER feature automatically activates the Ball Saver gate to close the lane's flexible ball guide, for a fixed length of time, returning the ball to the Flipper.

At the start of each ball, the °AUTO SAVER feature remains active (two flashing rollover button lights in each Ball Saver lane) until the game score is greater than 200,000 points (adjustable—°see **REGISTER "AUTO SAVER" below**). The AUTO SAVER feature is then disabled for both Ball Saver lanes but the player can still earn one AUTO-SAVE per lane at a time. Completing all three (3) lit SHIELD targets activates the left MAGIC-SAVE lane's AUTO-SAVE. Completing all four (4) lit DUST targets activates the right MAGIC-SAVE lane's AUTO-SAVE. The player can retain either MAGIC-SAVE lane's AUTO-SAVE by manually activating the Ball Saver gate before the AUTO-SAVE is used.

Completing either MAGIC-SAVE lane, with its rollover button lights flashing, awards 10,000 points. Completing either Ball Saver lane, with its rollover button lights unlit, awards 5,000 points.

°The level of game points, beyond which the AUTO SAVER feature is disabled, is adjustable by using one of the following settings:

REGISTER	SETTING	FUNCTION
AUTO SAVER	0	Game point level is no points.
AUTO SAVER	1	Game point level is 100,000 points.
AUTO SAVER	2	Game point level is 200,000 points.
AUTO SAVER	3	Game point level is 300,000 points.

°The initial length of time (for each player) either Ball Saver gate remains closed after being manually activated is adjustable by using one of the following settings. During the game, this time length is also controlled by the **"CONTROL GATE TIMER" REGISTER.** See note below.

REGISTER	SETTING	FUNCTION
GATE ON TIMER	0	Length of time is 0.83 second.
GATE ON TIMER	1	Length of time is 1.00 second.
GATE ON TIMER	2	Length of time is 1.16 seconds.
GATE ON TIMER	3	Length of time is 1.33 seconds.
GATE ON TIMER	4	Length of time is 1.50 seconds.
GATE ON TIMER	5	Length of time is 1.66 seconds.
GATE ON TIMER	6	Length of time is 1.83 seconds.
GATE ON TIMER	7	Length of time is 2.00 seconds.

°**REGISTER "CONTROL GATE TIMER,"** for each player, controls the length of time (along with the **"GATE ON TIMER" REGISTER)** either Ball Saver gate remains closed after being manually activated. See note below.

REGISTER	SETTING	FUNCTION
CONTROL GATE TIMER	0	Ball Saver is manually activated 6 times.
CONTROL GATE TIMER	1	Ball Saver is manually activated 8 times.
CONTROL GATE TIMER	2	Ball Saver is manually activated 10 times.
CONTROL GATE TIMER	3	Ball Saver is manually activated 12 times.
CONTROL GATE TIMER	4	Ball Saver is manually activated 14 times.
CONTROL GATE TIMER	5	Ball Saver is manually activated 16 times.
CONTROL GATE TIMER	6	Ball Saver is manually activated 18 times.
CONTROL GATE TIMER	7	Ball Saver is manually activated 20 times.

NOTE: The Gate On Timer is initialized for each player at the beginning of the game. See **REGISTER "GATE ON TIMER").** The game counts the number of times the Ball Saver gates are manually activated by a particular player. If a match is found when compared to the number of times allowed, as set in the **"CONTROL GATE TIMER" REGISTER,** the next lower time setting in the **"CONTROL GATE TIMER" REGISTER** is selected automatically.

7. DRAGON'S LAIR FEATURE

This game has two DRAGON'S LAIR lane and wire ramp combinations. One is located on the upper left side of the Playfield and the other is located on the upper right side. When a ball enters into either DRAGON'S LAIR lane, it rolls down against a Ball Kicker (Knocker) and also makes a rollover switch. This activates the Ball Kicker's solenoid so that its plunger kicks the ball up the DRAGON'S LAIR lane, around and thru the wire ramp back onto the Playfield.

A ball captured in the left TELEPORT lane flashes the left DRAGON'S LAIR light. This qualifies two-ball multi-ball play which begins after the ball enters the left DRAGON'S LAIR. See the "MULTI-BALL PLAY" feature below and on page 1-21. A ball captured in the right TELEPORT lane begins the same sequence involving the right DRAGON'S LAIR and its light.

Completing either DRAGON'S LAIR, regardless of whether its light is lit or unlit, awards 10,000 points and also awards the accumulated points in the DRAGON'S FLAME BONUS. See the "DRAGON'S FLAME BONUS" feature on page 1-17.

8. TELEPORT FEATURE

The left and right TELEPORT lanes each contain a Teleport Drop Target assembly. When either one of the Teleport Drop Targets captures a ball:

1. It is lowered (with the trapped ball) below the Playfield surface so that the flat top of the Teleport Drop Target is even with the top surface of the Playfield.
2. Its "TELEPORT" light starts flashing.
3. A new ball is fed into the shooter lane.
4. A "SUMMON HELP" light starts flashing on the Backboard which qualifies two-ball multi-ball play.

NOTE: When balls are captured in both Teleport Drop Targets, two-ball multi-ball play is qualified. See "MULTI-BALL PLAY" feature below and on page 1-21. For two-ball multi-ball play, one captured ball is released. For three-ball multi-ball play, captured balls in each of the two Teleport Drop Targets are released.

After the left Teleport Drop Target is lowered, the ball passes thru the left TELEPORT lane without interruption. Lowering the right Teleport Drop Target lowers the BELL TOWER'S movable ramp which provides access to the BELL TOWER. See the BELL TOWER feature on page 1-18.

°When the game is over, the selected setting in the **"RETAIN BALLS" REGISTER** determines whether Teleport Drop Targets retain or eject captured balls.

REGISTER	SETTING	FUNCTION
RETAIN BALLS	0	One or both Teleport Drop Targets will eject held ball at end of game.
RETAIN BALLS	1	One Teleport Drop Target retains ball & other Teleport Drop Target ejects ball at end of game.
RETAIN BALLS	2	Both Teleport Drop Targets retain held balls at end of game.

9. MULTI-BALL PLAY FEATURE

Two-ball multi-ball play is achieved using the left DRAGON'S LAIR as follows: See the "DRAGON'S LAIR FEATURE" above.

1. When a ball is captured by the Teleport Drop Target in the left TELEPORT lane, the left "DRAGON'S LAIR" light and the "SUMMON HELP" light both flash on. See the "TELEPORT FEATURE" above. This qualifies two-ball multi-ball play.
2. After a new ball enters the left DRAGON'S LAIR, the captured ball is ejected from the Teleport Drop Target. Two-ball multi-ball play now begins.

Two-ball multi-ball play is achieved using the right DRAGON'S LAIR as follows: See the "DRAGON'S LAIR FEATURE" above.

1. When a ball is captured by the Teleport Drop Target in the right TELEPORT lane, the right "DRAGON'S LAIR" light and the "SUMMON HELP" light both flash on. See the "TELEPORT FEATURE" above. This qualifies two-ball multi-ball play.
2. After a new ball enters the left DRAGON'S LAIR, the captured ball is ejected from the Teleport Drop Target. Two-ball multi-ball play now begins.

Two-ball or three-ball multi-ball play is achieved using the DUNGEON LEVEL inclined lane and circular ramp combination as follows: See the "DUNGEON LEVEL FEATURE" on page 1-16.

For two-ball multi-ball play:

1. A ball captured by the Teleport Drop Target in either TELEPORT lane flashes the "SUMMON HELP" light. This qualifies two-ball multi-ball play.
2. After the ball completes the DUNGEON LEVEL inclined lane and circular ramp combination, the captured ball is ejected from the Teleport Drop Target. Two-ball multi-ball play now begins.

Three-ball multi-ball play is achieved the same way as two-ball except that both Teleport Drop Targets must capture a ball.

Achieving successive multi-ball plays becomes increasingly difficult due to an increase in the number of required Teleport Drop Target ball captures as shown in Figure 5 on page 1-21.

FIGURE 5. THREE-BALL MULTI-BALL PLAY QUALIFICATION SEQUENCE

3-BALL MULTI-BALL PLAY QUALIFICATION	REQUIRED TELEPORT DROP TARGET ACTIONS
1st time	Both Teleport Drop Targets capture game balls.
2nd time	1. Ball is captured by Teleport Drop Target "A". 2. Ball is captured by Teleport Drop Target "B". 3. Ball is ejected from Teleport Drop Target "A". 4. Ball is captured by Teleport Drop Target "A".
3rd time	The above steps 1 thru 4 are repeated & followed by: 5. Ball is ejected from Teleport Drop Target "B". 6. Ball is captured by Teleport Drop Target "B".
4th time	The above steps 1 thru 6 are repeated & followed by: 7. Ball is ejected from Teleport Drop Target "A". 8. Ball is captured by Teleport Drop Target "A".
5th time	The above steps 1 thru 8 are repeated & followed by: 9. Ball is ejected from Teleport Drop Target "B". 10. Ball is captured by Teleport Drop Target "B".

The 6th, 7th, 8th, 9th times and beyond, add on additional steps as shown above.

NOTES:

1. Teleport Drop Target "A" or Teleport Drop Target "B" could be in the left TELEPORT lane or the right TELEPORT lane. Teleport Drop Target "A" is the FIRST Teleport Drop Target to capture a game ball. Teleport Drop Target "B" is the SECOND Teleport Drop Target to capture a game ball.
2. Two-ball multi-ball play can interrupt any of the above Teleport Drop Target action sequences before three-ball multi-ball is qualified or achieved. However, the required Teleport Drop Target action sequence continues.
3. Whenever the "100 K" light flashes on, the "SUMMON HELP" light (if already flashing) turns off. This prevents achieving multi-ball play resulting from an unsuccessful shooter lane SKILL SHOT attempt.

°The selected setting in the "MULTI-BALL SAVERS" REGISTER controls whether the AUTO-SAVER feature, during multi-ball play, is active or inactive:

REGISTER	SETTING	FUNCTION
MULTI-BALL SAVERS	0	Does not activate AUTO-SAVER during multi-ball play.
MULTI-BALL SAVERS	1	Activates AUTO-SAVER during multi-ball play.

10. MISCELLANEOUS FEATURES

The SPECIAL is awarded when the game score reaches the first threshold of 1,750,000 points.

Each rebound awards 10 points.
Each slingshot awards 10 points.
Each thumper bumper awards 100 points.

°The selected setting in the **"ATTRACT SOUND" REGISTER** enables or disables, after the game is over, the ATTRACT SOUND mode while displaying Hi-score or Instructions.

REGISTER	SETTING	FUNCTION
ATTRACT SOUND	0	Disables the ATTRACT SOUND mode.
ATTRACT SOUND	1	Enables the ATTRACT SOUND mode.

In Basic Options:
°The selected setting in the **"SLINGSHOT" REGISTER** controls whether the slingshots are active or inactive.

REGISTER	SETTING	FUNCTION
SLINGSHOT	0	De-activates the slingshots.
SLINGSHOT	1	Activates the slingshots.

°The number of tilt warnings is adjustable by using one of the following settings:

REGISTER	SETTING	FUNCTION
TILT WARNING	0	No tilt warning
TILT WARNING	1	One tilt warning
TILT WARNING	2	Two tilt warnings
TILT WARNING	3	Three tilt warnings

SECTION 2

Component Layouts, Schematics & Wiring Diagrams

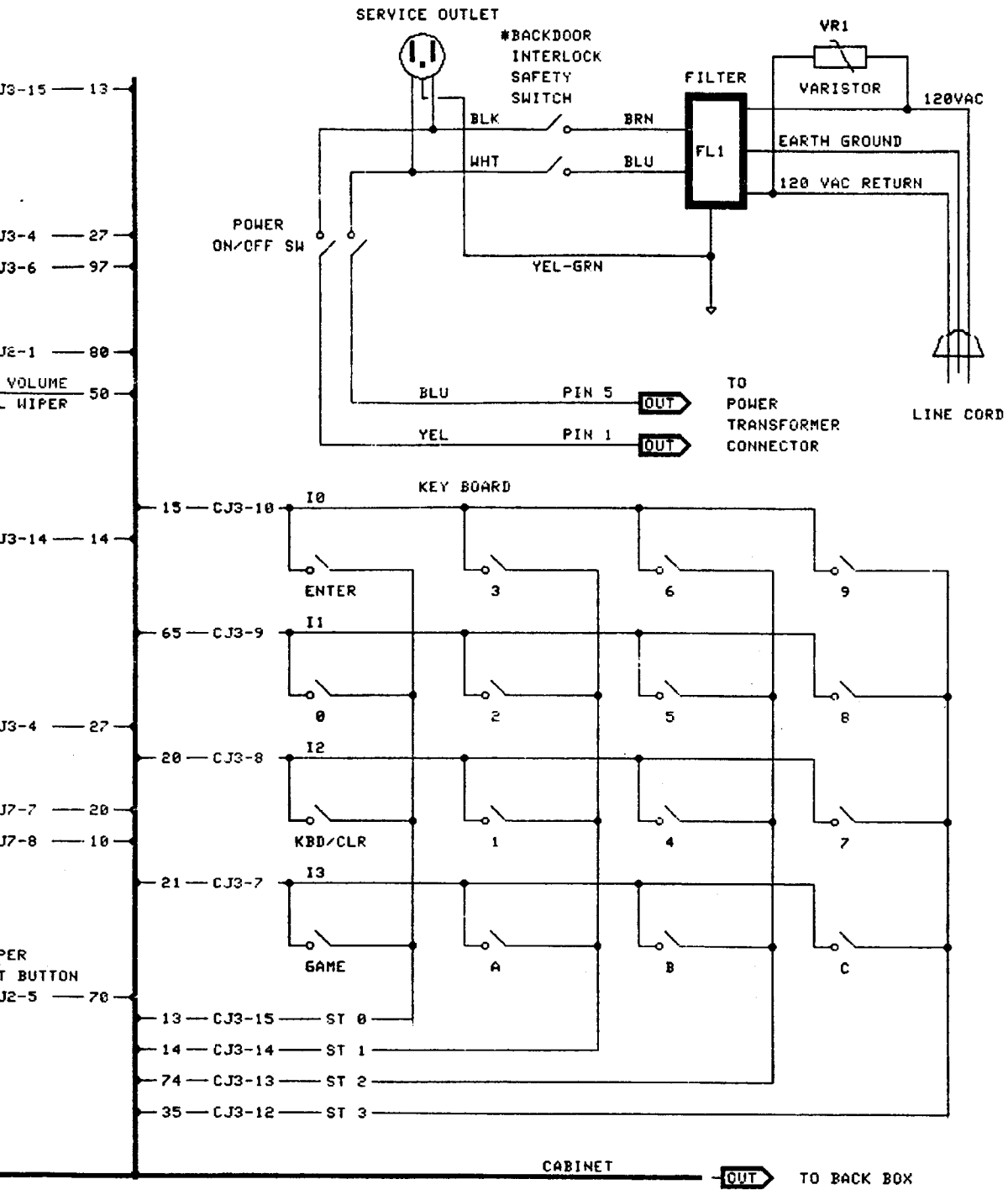

COLOR CODE

1=RED	7=ORANGE
2=BLUE	8=BLACK
3=YELLOW	9=GRAY
4=GREEN	0=NO TRACE
5=WHITE	11-VIOLET
6=BROWN	

NOTES:	BALLY MIDWAY MFG. CO.	
W. STONE	DUNGEONS AND DRAGONS CABINET DIAGRAM M051-00H06-A003	
10/5/87		
	SHEET 1 OF 1	REV A

05 OCT 87 03:59 /USER/WES/DRAGON/CABINET 1.DRAW

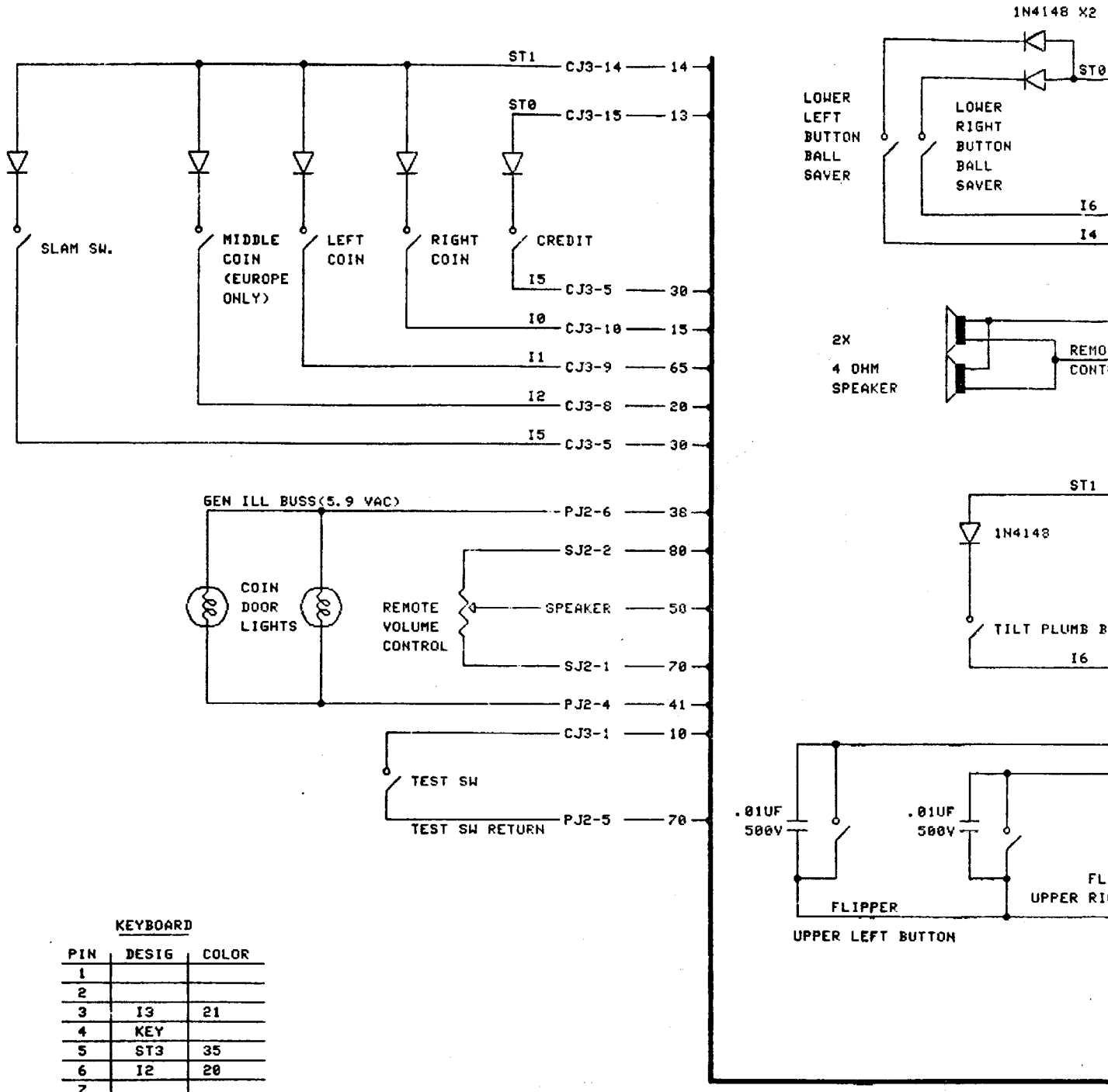

KEYBOARD

PIN	DESIG	COLOR
1		
2		
3	I3	21
4	KEY	
5	ST3	35
6	I2	20
7		
8	ST2	74
9		
10	I1	65
11	ST1	14
12		
13	I0	15
14		
15	ST0	13

* OPTIONAL- NOT USED IN ALL GAMES

PLAYFIELD (SHEET 1 OF 3)

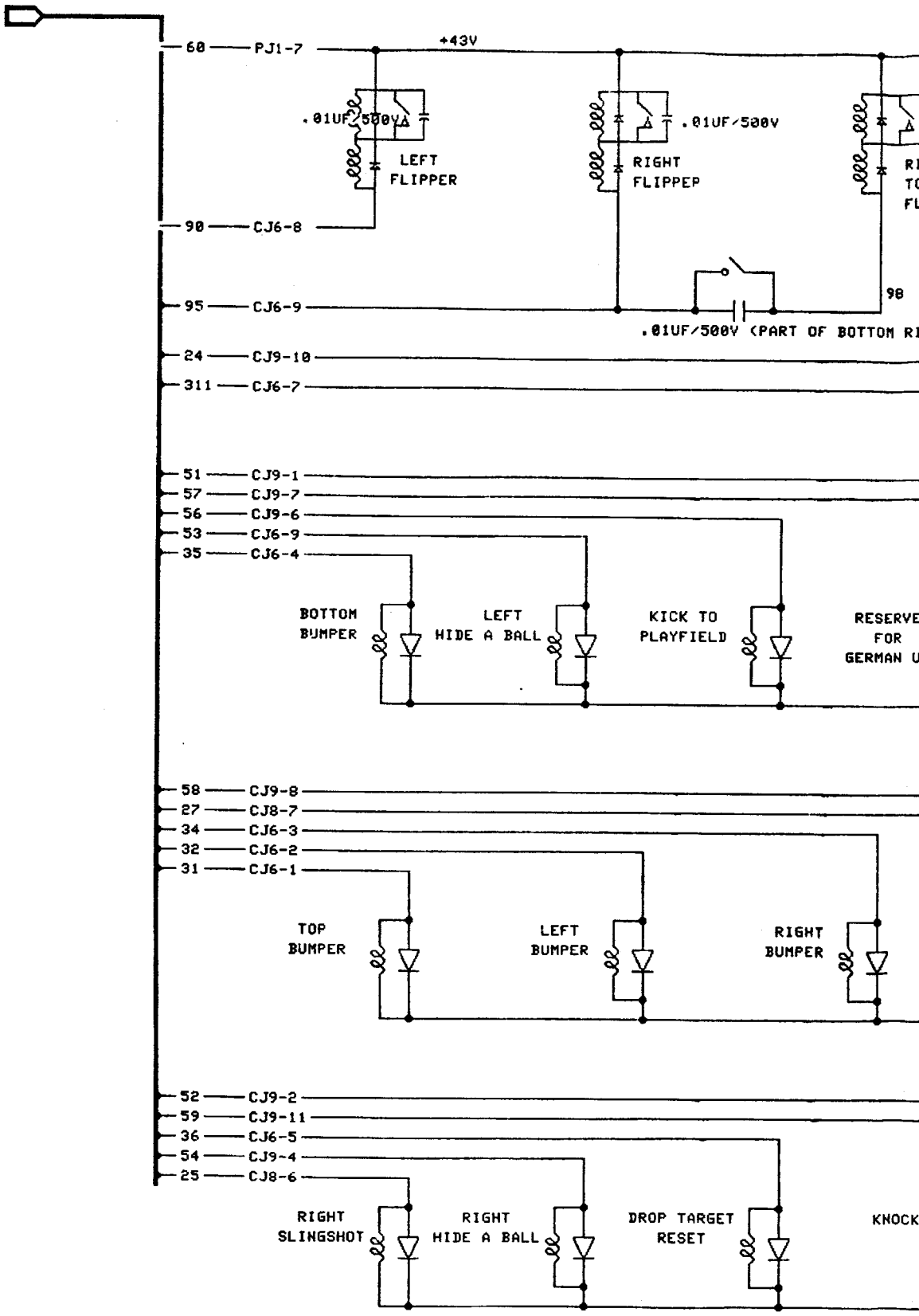

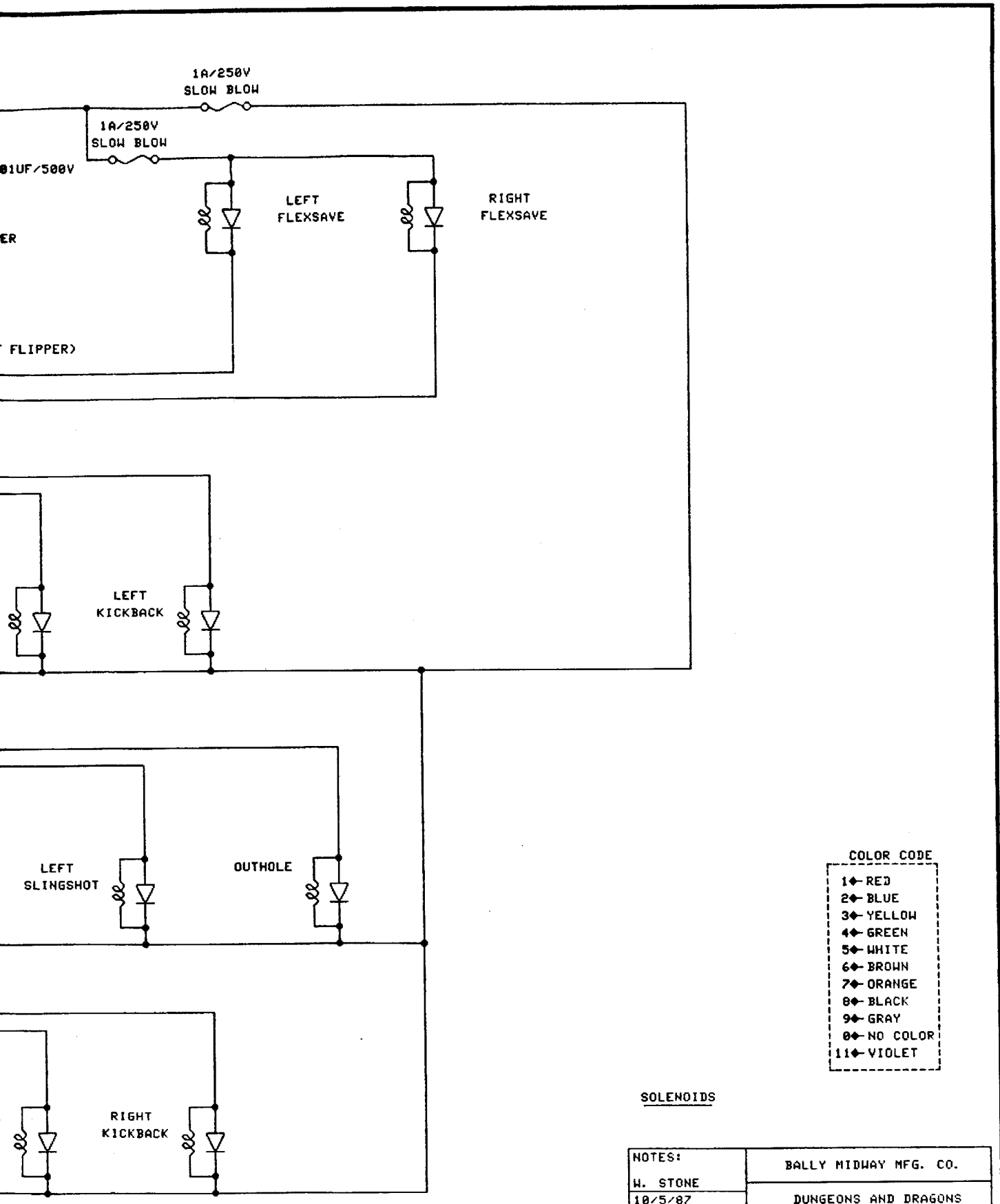

NOTES:	BALLY MIDWAY MFG. CO.	
W. STONE	DUNGEONS AND DRAGONS PLAYFIELD DIAGRAM M051-00H06-A005	
10/5/87		
	SHEET 1 OF 3	REV A

05 OCT 87 10:46 /USER/WES/DRAGON/PLAYFIELD 1.DRAW

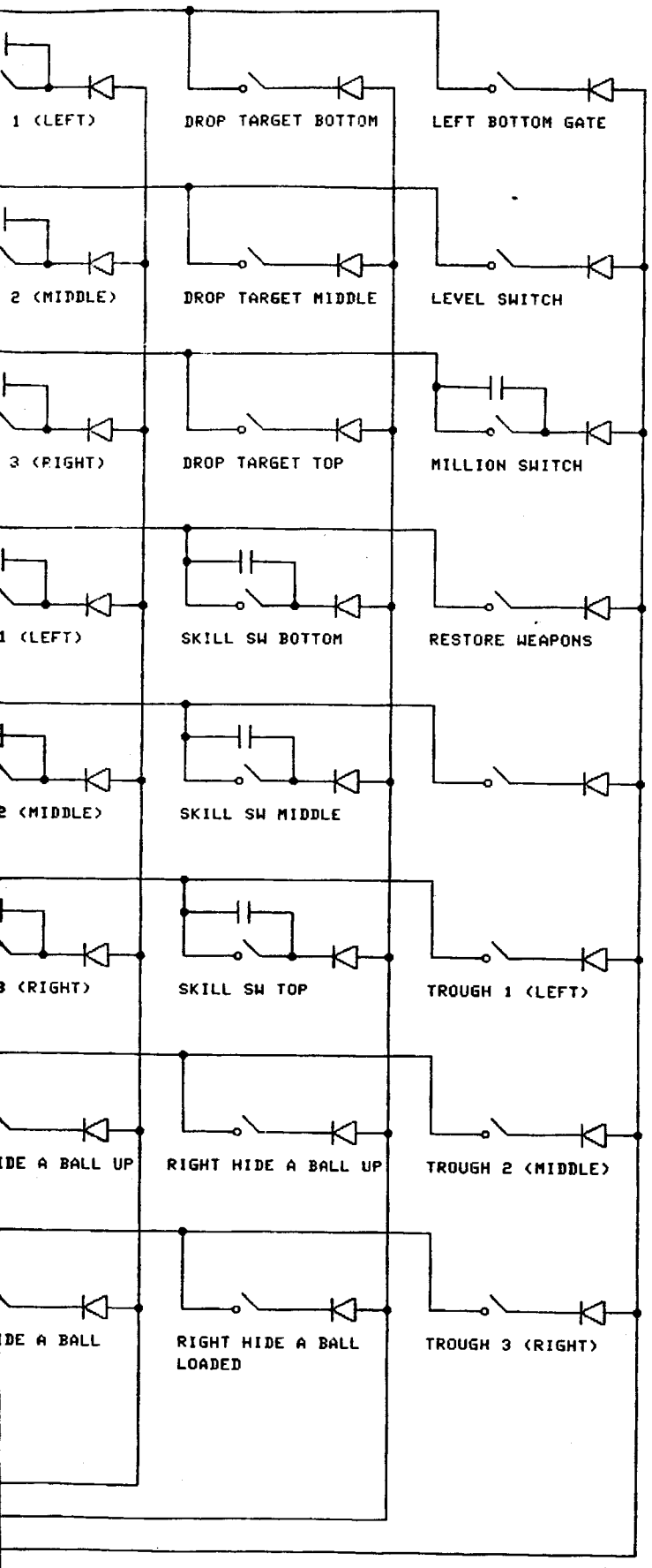

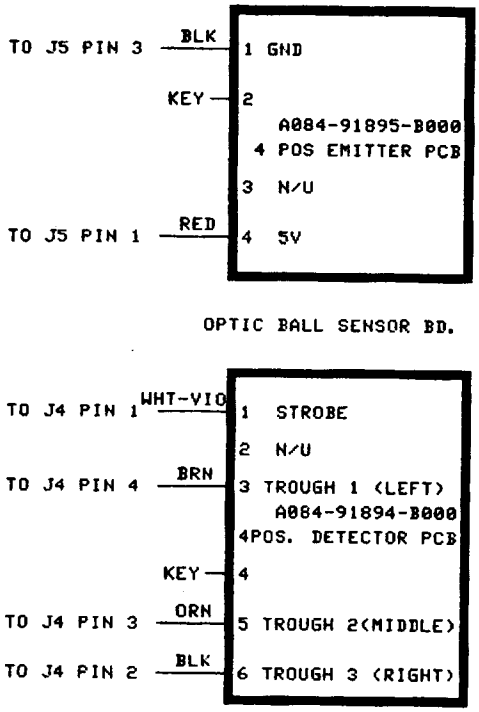

COLOR CODE

1-RED	6-BROWN
2-BLUE	7-ORANGE
3-YELLOW	8-BLACK
4-GREEN	9-GRAY
5-WHITE	0-NO TRACE
	11-VIOLET

NOTE 1. ALL SWITCH DIODES ARE 1N4148

NOTE 2. * INDICATES NOT USED ON PLAYFIELD. DRAWING ONLY TO SHOW RESPECTIVE CABINET SWITCH POSITION IN SWITCH MATRIX.

NOTE 3. ALL CAPACITORS ARE .05MF,25V

PLAYFIELD SWITCHES

NOTES:	BALLY MIDWAY MFG. CO.
W. STONE	
10/5/87	DUNGEONS AND DRAGONS PLAYFIELD DIAGRAM M051-00H06-A005
	SHEET 2 OF 3 — REV A

05 OCT 87 11:13 /USER/WES/DRAGON/PLAYFIELD 2.DRAW

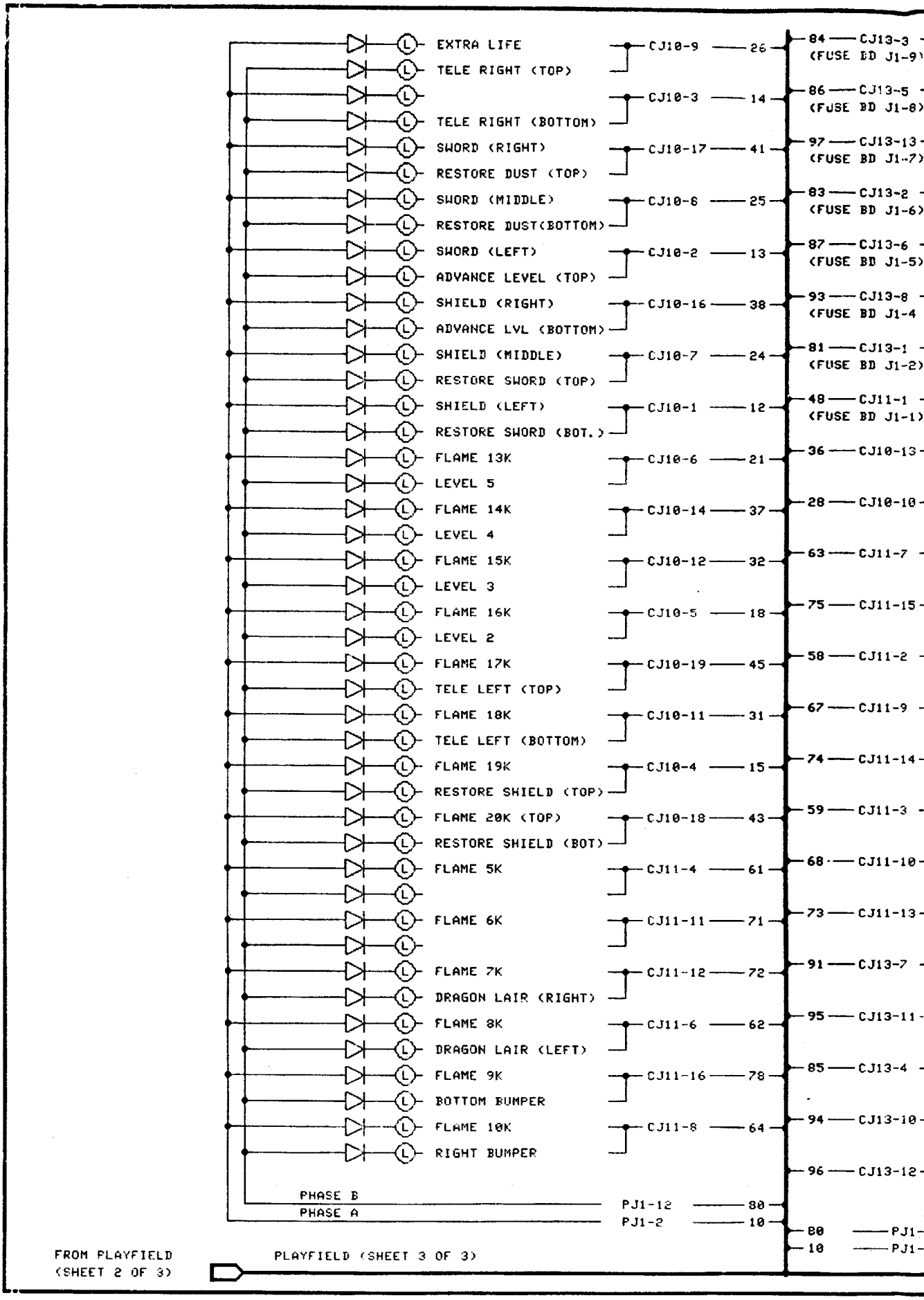
EXTRA LIFE
TELE RIGHT (TOP)
TELE RIGHT (BOTTOM)
SWORD (RIGHT)
RESTORE DUST (TOP)
SWORD (MIDDLE)
RESTORE DUST(BOTTOM)
SWORD (LEFT)
ADVANCE LEVEL (TOP)
SHIELD (RIGHT)
ADVANCE LVL (BOTTOM)
SHIELD (MIDDLE)
RESTORE SWORD (TOP)
SHIELD (LEFT)
RESTORE SWORD (BOT.)
FLAME 13K
LEVEL 5
FLAME 14K
LEVEL 4
FLAME 15K
LEVEL 3
FLAME 16K
LEVEL 2
FLAME 17K
TELE LEFT (TOP)
FLAME 18K
TELE LEFT (BOTTOM)
FLAME 19K
RESTORE SHIELD (TOP)
FLAME 20K (TOP)
RESTORE SHIELD (BOT)
FLAME 5K
FLAME 6K
FLAME 7K
DRAGON LAIR (RIGHT)
FLAME 8K
DRAGON LAIR (LEFT)
FLAME 9K
BOTTOM BUMPER
FLAME 10K
RIGHT BUMPER
CJ10-9 26
CJ10-3 14
CJ10-17 41
CJ10-8 25
CJ10-2 13
CJ10-16 38
CJ10-7 24
CJ10-1 12
CJ10-6 21
CJ10-14 37
CJ10-12 32
CJ10-5 18
CJ10-19 45
CJ10-11 31
CJ10-4 15
CJ10-18 43
CJ11-4 61
CJ11-11 71
CJ11-12 72
CJ11-6 62
CJ11-16 78
CJ11-8 64
84 CJ13-3 (FUSE BD J1-9)
86 CJ13-5 (FUSE BD J1-8)
97 CJ13-13 (FUSE BD J1-7)
83 CJ13-2 (FUSE BD J1-6)
87 CJ13-6 (FUSE BD J1-5)
93 CJ13-8 (FUSE BD J1-4
81 CJ13-1 (FUSE BD J1-2)
48 CJ11-1 (FUSE BD J1-1)
36 CJ10-13
28 CJ10-10
63 CJ11-7
75 CJ11-15
58 CJ11-2
67 CJ11-9
74 CJ11-14
59 CJ11-3
68 CJ11-10
73 CJ11-13
91 CJ13-7
95 CJ13-11
85 CJ13-4
94 CJ13-10
96 CJ13-12
PHASE B
PHASE A
PJ1-12 80
PJ1-2 10
80 PJ1-
10 PJ1-
FROM PLAYFIELD (SHEET 2 OF 3)
PLAYFIELD (SHEET 3 OF 3)

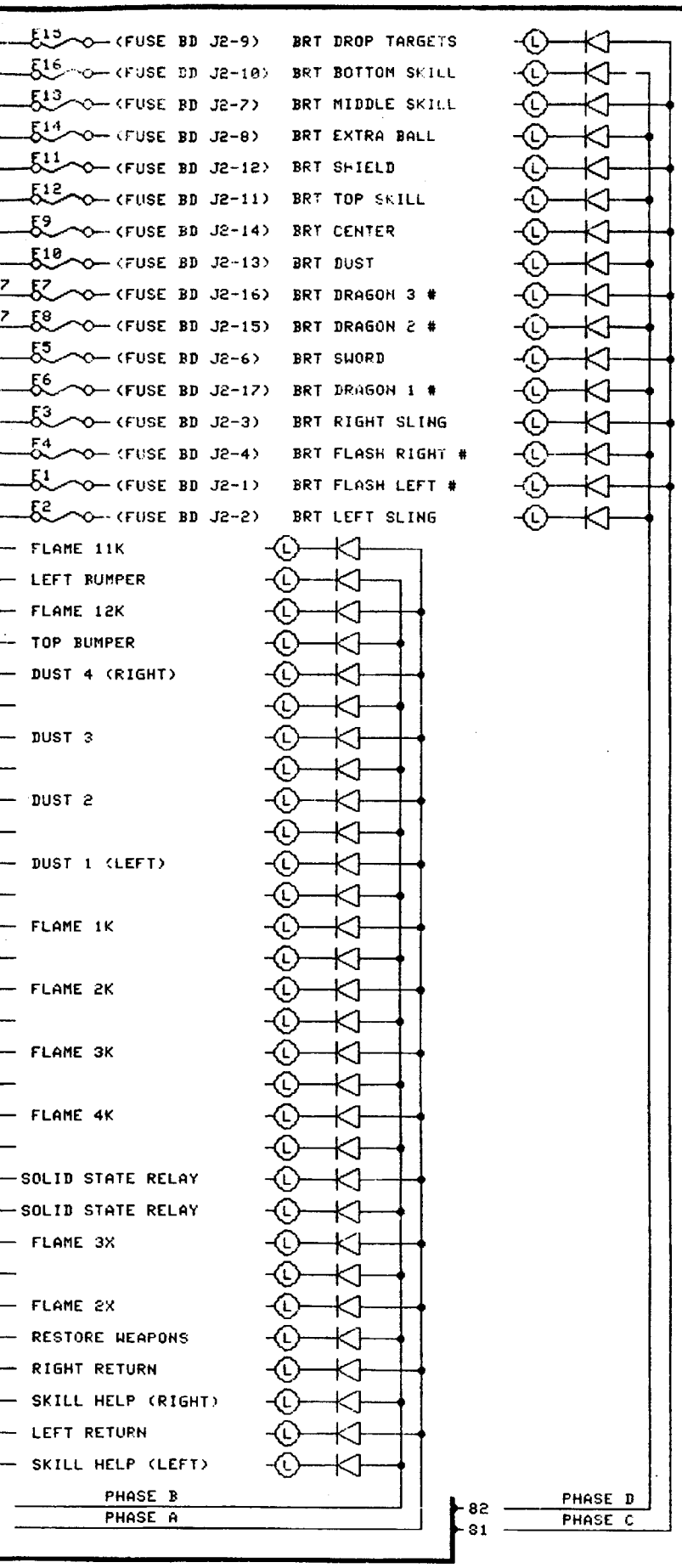

NOTE: #= LOCATED IN TOP BOX (PART OF BACKBOX)

COLOR CODE

1◆-RED	6◆-BROWN
2◆-BLUE	7◆-ORANGE
3◆-YELLOW	8◆-BLACK
4◆-GREEN	9◆-GRAY
5◆-WHITE	0◆-NO COLOR
	11◆-VIOLET

NOTE: DIODES ARE 1N4004

ALL FUSES IN FUSEBOARD ARE 3/4A MDQ/250V AND LOCATED IN THE BACKBOX

FEATURE LIGHTS AND BRIGHT LIGHTS

NOTES:	BALLY MIDWAY MFG. CO.
W. STONE	
10/5/87	DUNGEONS AND DRAGONS PLAYFIELD DIAGRAM M051-00H06-A005
	SHEET 3 OF 3 REV A

05 OCT 97 11:05 /USER/WES/DRAGON/PLAYFIELD 3.DRAW

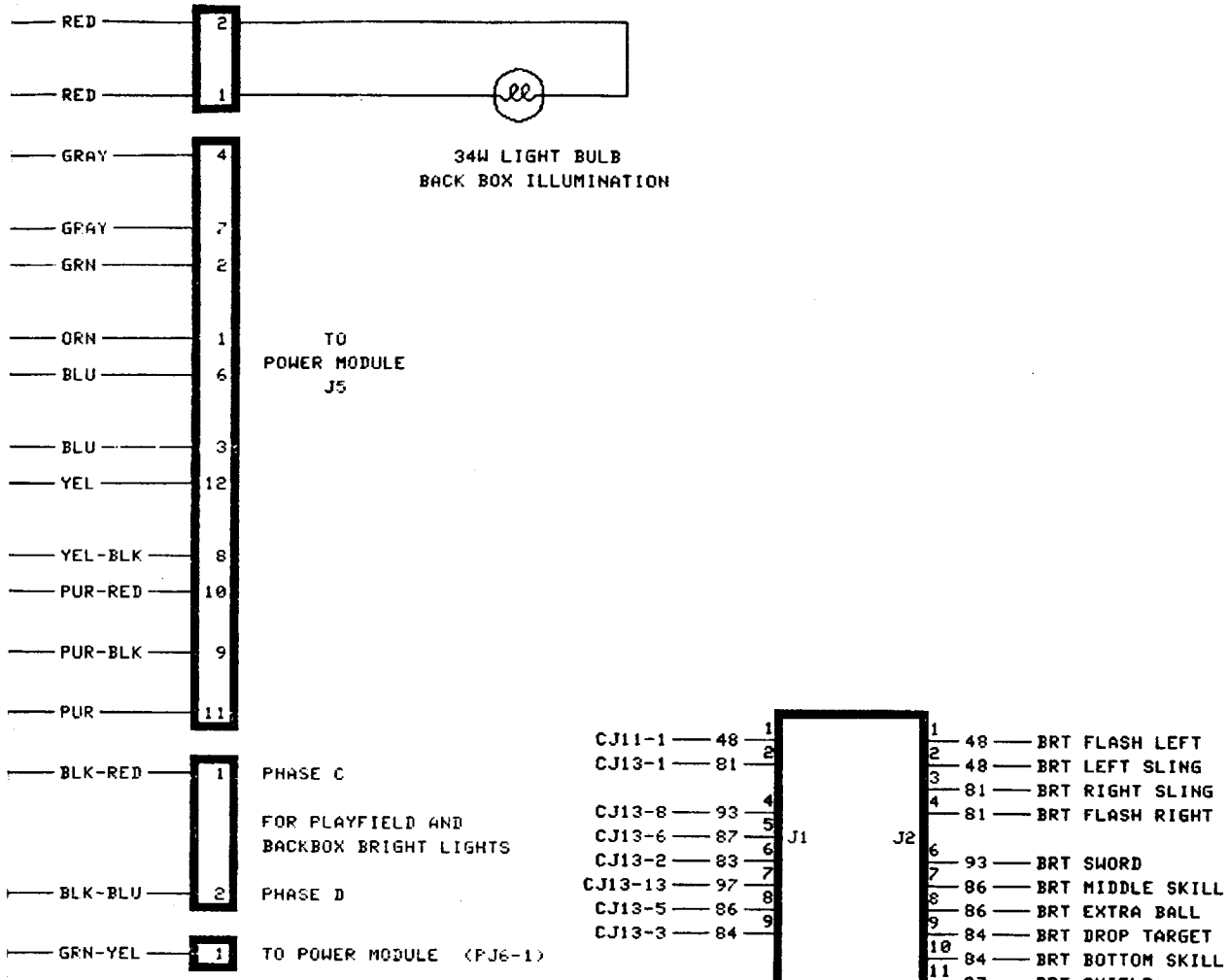

J1

1	N/U
2	0A FEATURE LITES
3	N/U
4	N/U
5	N/U
6	N/U
7	SOL. BUSS+43V. D.C.
8	N/U
9	GEN. ILL. BUS *
10	N/U
11	GEN. ILL. BUS *
12	0B FEATURE LITES

TO PLAYFIELD

* = 32 GI LAMPS

TABLE "A"

115VAC,2-8,3-6,7-10
120VAC,2-8,4-6,7-11
220VAC,4-8,7-9
240VAC,4-8,7-11

COLOR CODE

1-RED	6-BROWN
2-BLUE	7-ORANGE
3-YELLOW	8-BLACK
4-GREEN	9-GRAY
5-WHITE	0-NO TRACE
	11-VIOLET

POWER DISTRIBUTION

NOTES:	BALLY MIDWAY MFG. CO.	
W. STONE		
10/5/87	DUNGEONS AND DRAGONS BACKBOX	
	M051-00H06-A006	
	SHEET 1 OF 3	REV A

07 OCT 87 10:15 /USER/WES/DRAGON/BACKBOX 1.DRAW

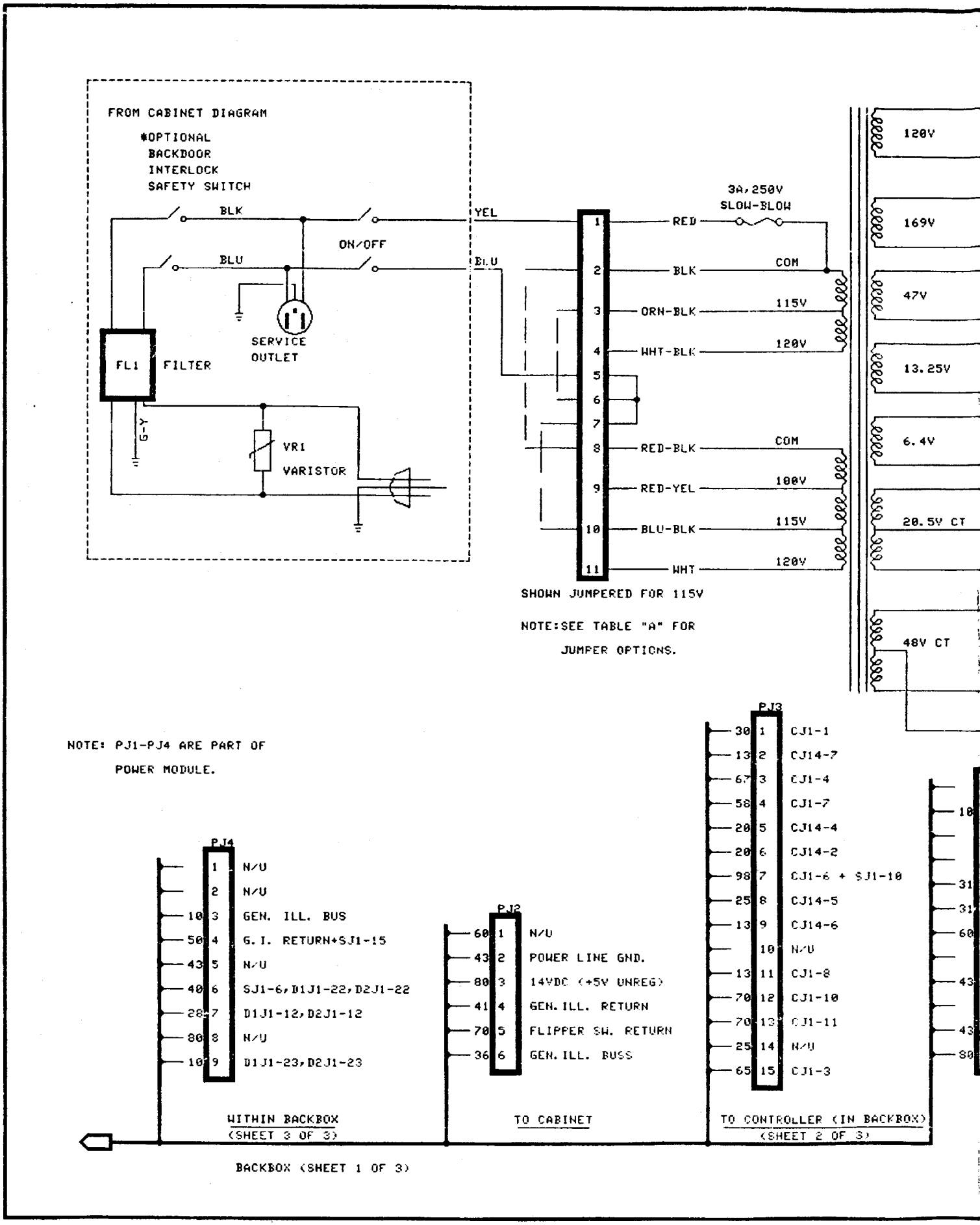
FROM CABINET DIAGRAM
*OPTIONAL
BACKDOOR
INTERLOCK
SAFETY SWITCH
BLK
BLU
ON/OFF
SERVICE
OUTLET
FL1
FILTER
G-Y
VR1
VARISTOR
YEL
BLU
3A/250V
SLOW-BLOW
RED
BLK
COM
ORN-BLK
115V
WHT-BLK
120V
RED-BLK
COM
RED-YEL
100V
BLU-BLK
115V
WHT
120V
SHOWN JUMPERED FOR 115V
NOTE:SEE TABLE "A" FOR
JUMPER OPTIONS.
120V
169V
47V
13.25V
6.4V
20.5V CT
48V CT
NOTE: PJ1-PJ4 ARE PART OF
POWER MODULE.
PJ4
1 N/U
2 N/U
3 GEN. ILL. BUS
4 G.I. RETURN+SJ1-15
5 N/U
6 SJ1-6,D1J1-22,D2J1-22
7 D1J1-12,D2J1-12
8 N/U
9 D1J1-23,D2J1-23
WITHIN BACKBOX
(SHEET 3 OF 3)
PJ2
1 N/U
2 POWER LINE GND.
3 14VDC (+5V UNREG)
4 GEN.ILL. RETURN
5 FLIPPER SW. RETURN
6 GEN.ILL. BUSS
TO CABINET
PJ3
1 CJ1-1
2 CJ14-7
3 CJ1-4
4 CJ1-7
5 CJ14-4
6 CJ14-2
7 CJ1-6 + SJ1-10
8 CJ14-5
9 CJ14-6
10 N/U
11 CJ1-8
12 CJ1-10
13 CJ1-11
14 N/U
15 CJ1-3
TO CONTROLLER (IN BACKBOX)
(SHEET 2 OF 3)
BACKBOX (SHEET 1 OF 3)

	CJ-10	"A"PHASE	"B"PHASE
12	1	SHIELD (LEFT)	RESTORE SWORD (BOT)
13	2	SWORD (LEFT)	ADVANCE LEVEL (TOP)
14	3		TELE RIGHT (BOTTOM)
15	4	FLAME 19K	RESTORE SHIELD (TOP)
18	5	FLAME 16K	LEVEL 2
21	6	FLAME 13K	LEVEL 5
24	7	SHIELD (MIDDLE)	RESTORE SWORD (TOP)
25	8	SWORD (MIDDLE)	RESTORE DUST (BOT)
26	9	EXTRA LIFE	TELE RIGHT (TOP)
28	10	FLAME 12K	TOP BUMPER
31	11	FLAME 18K	TELE LEFT (BOTTOM)
32	12	FLAME 15K	LEVEL 3
36	13	FLAME 11K	LEFT BUMPER
37	14	FLAME 14K	LEVEL 4
	15	KEY	
38	16	SHIELD (RIGHT)	ADVANCE LEVEL (BOT)
41	17	SWORD (RIGHT)	RESTORE DUST (TOP)
43	18	FLAME 20K (TOP)	RESTORE SHIELD (BOT)
45	19	FLAME 17K	TELE LEFT (TOP)

	CJ-11	"A"PHASE * DENOTES "C" PHASE	"B"PHASE ** DENOTES "D" PHASE
48	1	BRT FLASH LFT ***	BRT LEFT SLING **
58	2	DUST 2	
59	3	FLAME 2K	
61	4	FLAME 5K	
	5	KEY	
62	6	FLAME 8K	DGN LAIR (LEFT)
63	7	DUST 4 (RIGHT)	
64	8	FLAME 10K	RIGHT BUMPER
67	9	DUST 1 (LEFT)	
68	10	FLAME 3K	
71	11	FLAME 6K	
72	12	FLAME 7K	DGN LAIR (RIGHT)
73	13	FLAME 4K	
74	14	FLAME 1K	
75	15	DUST 3	
78	16	FLAME 9K	BOTTOM BUMPER

	CJ-12	"A"PHASE	"B"PHASE
	1		
	2		
	3		
	4		
	5	KEY	
	6		
	7		
	8		
	9		
	10		
	11		
	12		
	13		
	14		
	15		
	16		
	17		

	CJ-13	"A"PHASE * DENOTES "C" PHASE	"B"PHASE ** DENOTES "D" PHASE
81	1	BRT R. SLING *	BRT FLASH R. ***
83	2	BRT MILLION *	BRT DUST **
84	3	BRT DT *	BRT B. SKILL **
85	4	FLAME 2X	RESTORE WEAPONS
86	5	BRT M. SKILL *	BRT EXTRA BALL**
87	6	BRT DRAGON 3 ***	BRT DRAGON 2 ***
91	7		
93	8	BRT SWORD *	BRT DRAGON 1 ***
	9	KEY	
94	10	RIGHT RETURN	SKILL HLP(RIGHT)
95	11	FLAME 3X	
96	12	LEFT RETURN	SKILL HLP (LEFT)
97	13	BRT SHIELD *	BRT TOP SKILL **

PLAYFIELD & BACKBOX LAMP OUTPUTS

COLOR CODE	
1-RED	6-BROWN
2-BLUE	7-ORANGE
3-YELLOW	8-BLACK
4-GREEN	9-GRAY
5-WHITE	0-NO TRACE
	11-VIOLET

*= IN TOP BOX

NOTES

CJ-12 NOT USED
BRIGHT LIGHTS TYPE 912 BULBS (C&D PHASE)
OTHER LIGHTS TYPE 555 BULBS (A&B PHASE)
CJ1 THROUGH CJ14 LOCATED ON CONTROLLER BOARD

SOLENO

J-6

1		TOP BUMPER
2		LEFT BUMPER
3		RIGHT BUMPER
4		BOTTOM BUMPER
5		DROP TARGET RESET
6		KEY
7		RIGHT FLEXSAVE
8		L. FLIPPER
9		R. FLIPPER

J-8

1		
2		
3		KEY
4		
5		
6		SLING RIGHT
7		SLING LEFT

J-7

1		
2		
3		
4		
5		KEY
6		
7		LEFT FLIPPER SWITCH
8		RIGHT FLIPPER SWITCH

CABINET SWITCHES

J-9

1		LEFT KICKBACK
2		RIGHT KICKBACK
3		LEFT HIDE A BALL
4		RIGHT HIDE A BALL
5		KEY
6		KICK TO PLAYFIELD
7		RESERVED FOR GERMAN
8		OUTHOLE
9		
10		LEFT FLEXSAVE
11		KNOCKER

) OUTPUTS TO PLAYFIELD

CJ-5

	1	
	2	
	3	
	4	
	5	KEY
	6	
20	7	SJ1-1
25	8	SJ1-2
28	9	SJ1-3
21	10	SJ1-4
	11	
	12	
	13	
	14	
27	15	SJ1-8

SOUND INFO. OUTPUT
(SHEET 3 OF 3)

CJ-4

511	1	ST5
80	2	I7
70	3	I6
60	4	I5
	5	KEY
50	6	I4
40	7	I3
30	8	I2
20	9	I1
10	10	I0
56	11	ST4
54	12	ST3
53	13	ST2
52	14	ST1
51	15	ST0

PLAYFIELD SWITCHES
(SHEET 2 OF 3)

CJ-3

10	1	TEST BUTTON
	2	
	3	KEY
27	4	I6
30	5	I5
97	6	I4
21	7	I3
20	8	I2
65	9	I1
15	10	I0
	11	
35	12	ST3
74	13	ST2
14	14	ST1
13	15	ST0

CABINET SWITCHES

CJ-2

30	1	D1J1-16 + D2J1-16
14	2	D1J1-3, D1J1-14, D2J1-3
18	3	D1J1-5, D2J1-5, D1J1-11
21	4	D1J1-7, D2J1-7, D2J1-14
23	5	D1J1-8, D2J1-8, D2J1-11
20	6	D1J1-6, D2J1-6
15	7	D1J1-4, D2J1-4
13	8	D1J1-2, D2J1-2
12	9	D1J1-1, D2J1-1
	10	N/U
	11	N/U
38	12	D2J1-9
24	13	D1J1-9, D1J1-21, D2J1-21
35	14	D1J1-20, D2J1-20
	15	KEY
34	16	D1J1-19, D2J1-19
32	17	D1J1-18, D2J1-18
31	18	D1J1-17, D2J1-17
	19	N/U

DIGITAL DISPLAY OUTPUTS
(SHEET 3 OF 3)

CJ-1

30	1	PJ3-1
	2	
65	3	PJ3-15
67	4	PJ3-3
	5	KEY
98	6	PJ3-7
58	7	PJ3-4
13	8	PJ3-11
	9	
70	10	PJ3-12
70	11	PJ3-13
	12	

CJ-14

	1	
20	2	PJ3-6
	3	KEY
20	4	PJ3-5
25	5	PJ3-8
13	6	PJ3-9
13	7	PJ3-2

POWER INPUTS
(SHEET 1 OF 3)

BACKBOX CABLE DISTRIBUTION

NOTES:	BALLY MIDWAY MFG. CO.	
W. STONE	DUNGEONS AND DRAGONS BACKBOX M051-00H06-A006	
10/5/87		
	SHEET 2 OF 3	REV A

05 OCT 87 11:20 /USER/WES/DRAGON/BACKBOX 2.DRAW

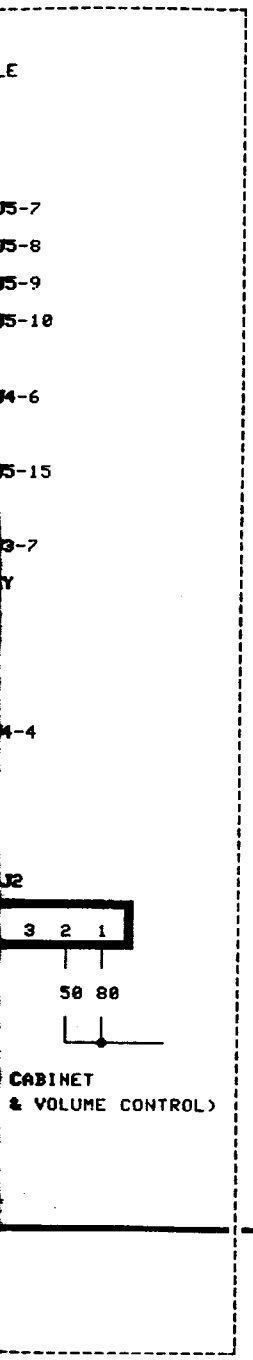

BACKBOX (SHEET 3 OF 3)

TO BACKBOX (PAGE 2 OF 3)

COLOR CODE	
1 - RED	6 - BROWN
2 - BLUE	7 - ORANGE
3 - YELLOW	8 - BLACK
4 - GREEN	9 - GRAY
5 - WHITE	0 - NO TRACE
	11 - VIOLET

DISPLAY MODULES & SOUND MODULE

NOTES:	BALLY MIDWAY MFG. CO.	
W. STONE	DUNGEONS AND DRAGONS BACKBOX M051-00H06-A006	
10/5/87		
	SHEET 3 OF 3	REV A

87 OCT 87 14:52 /USER/WES/DRAGON/BACKBOX 3.DRAW

DIGITAL DISPLAY MODULES-D1 & D2

PLYR 1&2

D1J1

12	CJ2-9		1
13	CJ2-8		2
14	CJ2-2		3
15	CJ2-7		4
18	CJ2-3		5
20	CJ2-6		6
21	CJ2-4		7
23	CJ2-5		8
24	CJ2-13		9
KEY	KEY		10
18	CJ2-3		11
28	PJ4-7		12
N/U	N/U		13
14	CJ2-2		14
N/U	N/U		15
30	CJ2-1		16
31	CJ2-18		17
32	CJ2-17		18
34	CJ2-16		19
35	CJ2-14		20
24	CJ2-13		21
40	PJ4-6		22
10	PJ4-9		23
	N/U		24

PLYR 3&4

D2J1

12	CJ2-9		1
13	CJ2-8		2
14	CJ2-2		3
15	CJ2-7		4
18	CJ2-3		5
20	CJ2-6		6
21	CJ2-4		7
23	CJ2-5		8
38	CJ2-12		9
KEY	KEY		10
23	CJ2-5		11
28	PJ4-7		12
N/U	N/U		13
21	CJ2-4		14
N/U	N/U		15
30	CJ2-1		16
31	CJ2-18		17
32	CJ2-17		18
34	CJ2-16		19
35	CJ2-14		20
24	CJ2-13		21
40	PJ4-6		22
10	PJ4-9		23
	N/U		24

SOUND MOD

SJ1

20	1
25	2
28	3
21	4
	5
40	6
	7
27	8
	9
98	10
	11
	12
	13
	14
50	15

6 5

(SPEAKE

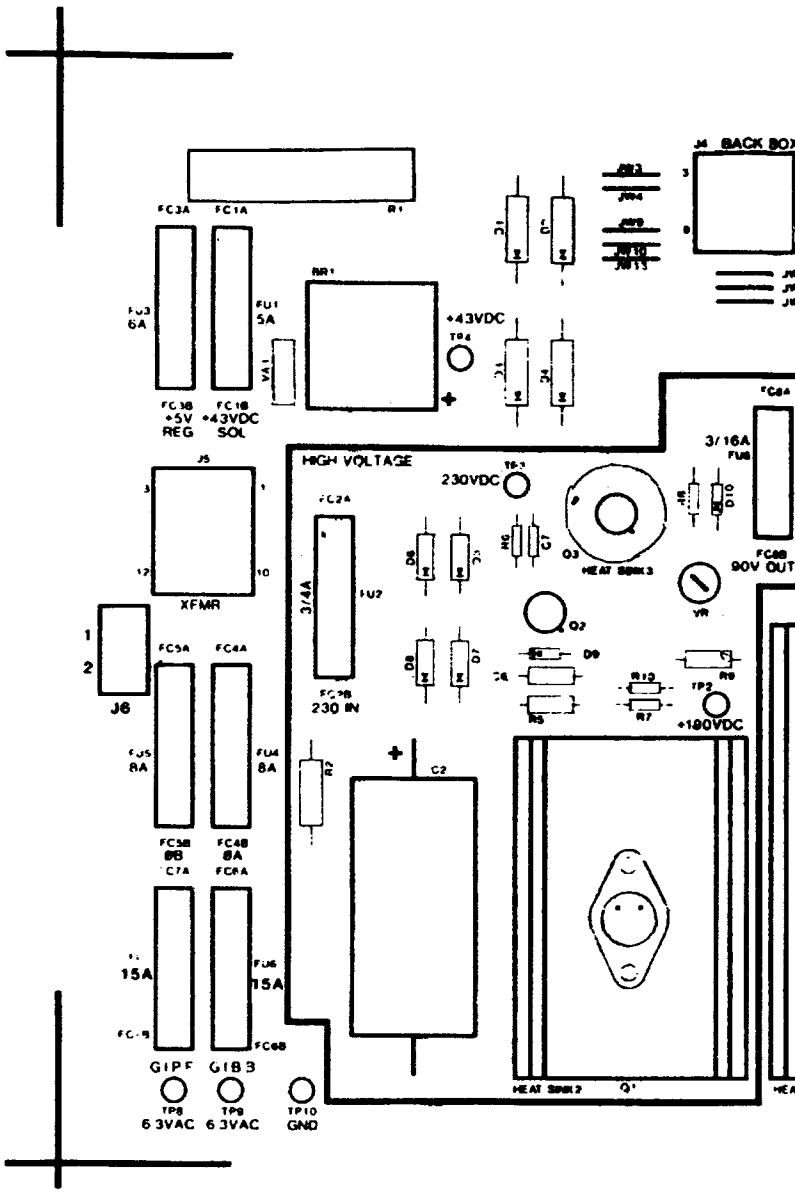

BRUNING · 40 · 107

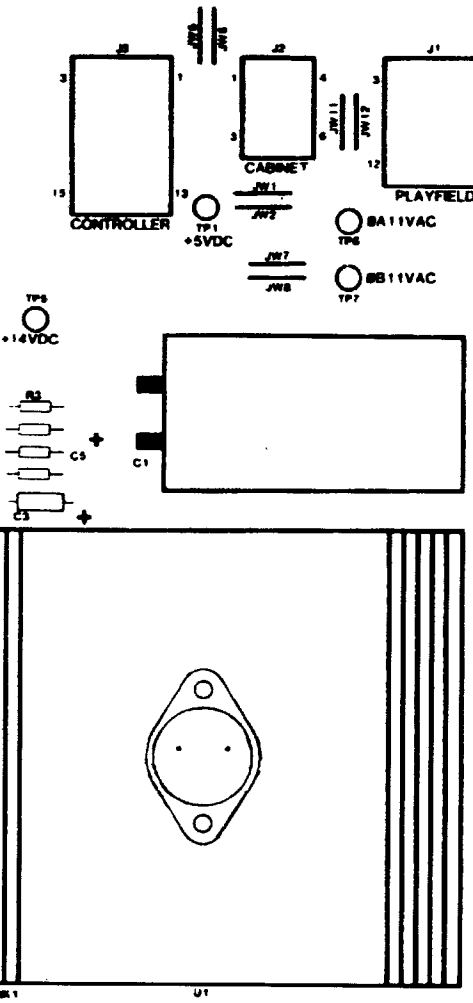

PAT. PENDING

A080-91785-D000

©1985 BALLY MIDWAY MFG. CO.
ALL RIGHTS RESERVED

6803 PINBALL POWER MODULE

THIS DWG IS CONFIDENTIAL & PROPERTY OF MIDWAY MFG. CO

DIM. TOLERANCES UNLESS OTHERWISE SPEC. CONCENTRICITY T.I.R. .002 FRACTIONAL ± 1/64 DECIMAL ± .005 HOLE DIA. + .002 − .000 ANGLE ± 1/2° DO NOT SCALE DWG.	FIRST USED ON DRN CL DATE 04/08/86 SCALE MECH CHK MAT'L ELEC CHK FINISH	MIDWAY MFG. CO. FRANKLIN PK., IL. 60131 A BALLY CO ASSY DRAWING 6803 PINBALL PWR MODULE A084-91785-D000	REVISIONS PART NO. M0·5·1 -0·0·C·5·3 -D·0·0·1

POWER MODULE
85-D000
53-D001

DESIGNATION	DESCRIPTION
JW1 - JW16	ZERO OHM RES. JUMPER
TP1 - TP10	TEST POINTS
F1*	5 AMP 3AG FUSE
F2	3/4 AMP 3AG FUSE
F3	6 AMP 3AG FUSE
F4, F5	8 AMP 3AG FUSE
F6, F7	15 AMP 3AG FUSE
F8	3/16 AMP 8AG FUSE
FC1A - FC3B, FC8A FC8B	FUSE CLIPS
FC4A - FC7B	FUSE CLIPS
J1	12 PIN M-N-L CONN. FEMALE
J2	6 PIN M-N-L CONN. MALE
J3	15 PIN M-N-L CONN. MALE
J4	9 PIN M-N-L CONN. MALE
J5	12 PIN M-N-L CONN. MALE
J6	2 PIN M-N-L CONN. MALE
6803 POWER MODULE	P.C. BOARD

4-23-86 REV. 1.0 FIXED R2, R6

* TWO FLIPPER GAMES ONLY - SEE SCHEMATIC

DESIGNATION LIST

DESIGNATION	DESCRIPTION
C1	11,000uf 20V ELEC.
P/O C1	TY-WRAP
P/O C1	SOLDER LUG
P/O C1	WIRE 20AWG
C2	160uf 350V ELEC.
P/O C2	TY-WRAP
C3	2uf 25V ELEC.
C4, C5	.1uf 25V CER.
C6, C7	.01uf 500V CER.
R1	600 OHM 10W
R2	100K 1W 5%
R3	2.2 OHM 1/4W 5%
R4	100 OHM 1/2W 5%
R5	22K 1/2W 5%
R6	100K 1/4W 5%
R7	390 OHM 1/4W 5%
R8	1.2K 1/4W 5%
R9	82K 1/2W 5%
R10	8.2K 1/4W 5%
VR1	0 - 25K 1/4W POT.
D1 - D4	MR751
D5 - D9	IN4004
D10	IN5275A ZENER
BR1	KBPC-35-02-W
P/O BR1	BRIDGE SPACER
Q1	2N3584
P/O Q1	SHIELD
P/O Q1	HEX SPACER
P/O Q1	6-32 X 5 SCREW
P/O Q1	6-32 X 12 SCREW
P/O Q1	LOCKWASHER EXT.
P/O Q1	LOCKWASHER INT.
P/O Q1	FLAT WASHER
P/O Q1	6-32 HEX NUT
P/O Q1	LABEL - CAUTION HIGH VOLT.
P/O Q1	HEATSINK 2
P/O Q1	INSULATOR TO-66
Q2, Q3	2N3440
P/O Q2, Q3	INSULATOR TO-5
P/O Q3	HEATSINK 3
U1	78H05C REG.
P/O U1	6-32 X 12 SCREW
P/O U1	6-32 HEX NUT
P/O U1	LOCKWASHER EXT.
P/O U1	FLAT WASHER
P/O U1	HEATSINK 1
P/O U1	INSULATOR TO-3
VA1	VARISTOR

6803 PINBALL POWER MODULE
A084-91785-D000
M051-00C53-D001

CROSS REFERENCE LIST

DESCRIPTION	QTY.	DESIGNATION NO.	PART NOS.
.01UF 500V CER.	2	C6,C7	0360-00800-0013
.1UF 25V CER.	2	C4,C5	0360-00800-0026
2UF 25V ELEC.	1	C3	0360-00800-0019
160UF 350V ELEC.	1	C2	0360-00800-0020
11,000UF 20V ELEC.	1	C1	0360-00800-0024
2.2 OHM 1/4W 5%	1	R3	100E-00005-0003
100 OHM 1/2W 5%	1	R4	100E-00006-0021
390 OHM 1/4W 5%	1	R7	100E-00005-0049
600 OHM 10W 10%	1	R1	100E-00002-0049
1.2K 1/4W 5%	1	R8	100E-00005-0063
8.2K 1/4W 5%	1	R10	100E-00005-0086
22K 1/2W 5%	1	R5	100E-00006-0065
82K 1/2W 5%	1	R9	100E-00006-0072
100K 1/4W 5%	1	R6	100E-00005-0115
100K 1W 5%	1	R2	100E-00007-0037
0-25K 1/4W POT	1	VR1	0360-00804-0004
MR 751	4	D1-D4	103E-00003-0016
1N4004	5	D5-D9	103E-00003-0005
1N5275	1	D10	103E-00001-0027
KBPC-35-02-W	1	BR1	103E-00005-0005
2N3440	2	Q2,Q3	104E-00003-0002
2N3584	1	Q1	104E-00005-0002
78H05C REG	1	U1	0360-00803-0021
VARISTOR METAL OXIDE 60V	1	VA1	115E-00001-0002
TY-WRAP	4	P/O C1,C2	0017-00042-0048
ZERO OHM RES. JUMPER	16	JW1-JW16	117E-00001-0001
TEST POINTS	10	TP1-TP10	0017-00007-0131
SOLDER LUG	2	P/O C1	0017-00021-0257
JUMPER WIRE 20AWG	2	P/O C1	0017-00033-0448
INSULATOR TO-3	1	P/O U1	0017-00042-0119
INSULATOR TO-5	2	P/O Q2,Q3	0017-00042-0151
INSULATOR TO-66	1	P/O Q1	0017-00042-0158
HEX SPACER	2	P/O Q1	0017-00042-0248
SHIELD	1	P/O Q1	0365-00952-0000
HEATSINK 1	1	P/O U1	112E-00001-0003
HEATSINK 2	1	P/O Q1	112E-00001-0002
HEATSINK 3	1	P/O Q3	112E-00001-0004
BRIDGE SPACER	1	P/O BR1	118E-00001-0001
6-32 X 12 SCREW	4	P/O Q1,U1	0017-00101-0132
6-32 X 5 SCREW	2	P/O Q1	0017-00101-0555
6-32 HEX NUT	4	P/O Q1,U1	0017-00103-0005
LOCKWASHER INT.	4	P/O Q1,	0017-00104-0008
LOCKWASHER EXT.	4	P/O Q1,U1	0017-00104-0009
FLAT WASHER	4	P/O Q1,U1	0017-00104-0106
FUSE CLIP	8	FC1A-FC3B, FC8A,FC8B	0017-00071-0033
FUSE CLIP	8	FC4A-FC7A	0017-00071-0034
3/16 AMP 8AG FUSE	1	F8	0017-00003-0206
3/4 AMP 3AG FUSE	1	F2	0017-00003-0010
5 AMP 3AG FUSE	1	F1*	0017-00003-0175
6 AMP 3AG FUSE	1	F3	0017-00003-0008

CROSS REFERENCE LIST

DESCRIPTION	QTY.	DESIGNATION NO.	PART NOS.
8 AMP 3AG FUSE	2	F4,F5	0017-00003-0387
15 AMP 3AG FUSE	2	F6,F7	0017-00003-0011
12 PIN M-N-L CONN. FEMALE	1	J1	0017-00021-0532
6 PIN M-N-L CONN. MALE	1	J2	0017-00021-0424
15 PIN M-N-L CONN. MALE	1	J3	0017-00021-0434
9 PIN M-N-L CONN. MALE	1	J4	0017-00021-0425
12 PIN M-N-L CONN. MALE	1	J5	0017-00021-0426
2 PIN M-N-L CONN. MALE	1	J6	0017-00021-0488
6803 POWER MODULE P.C.B.	1		A080-91785-D000

* TWO FLIPPER GAMES ONLY - SEE SCHEMATIC

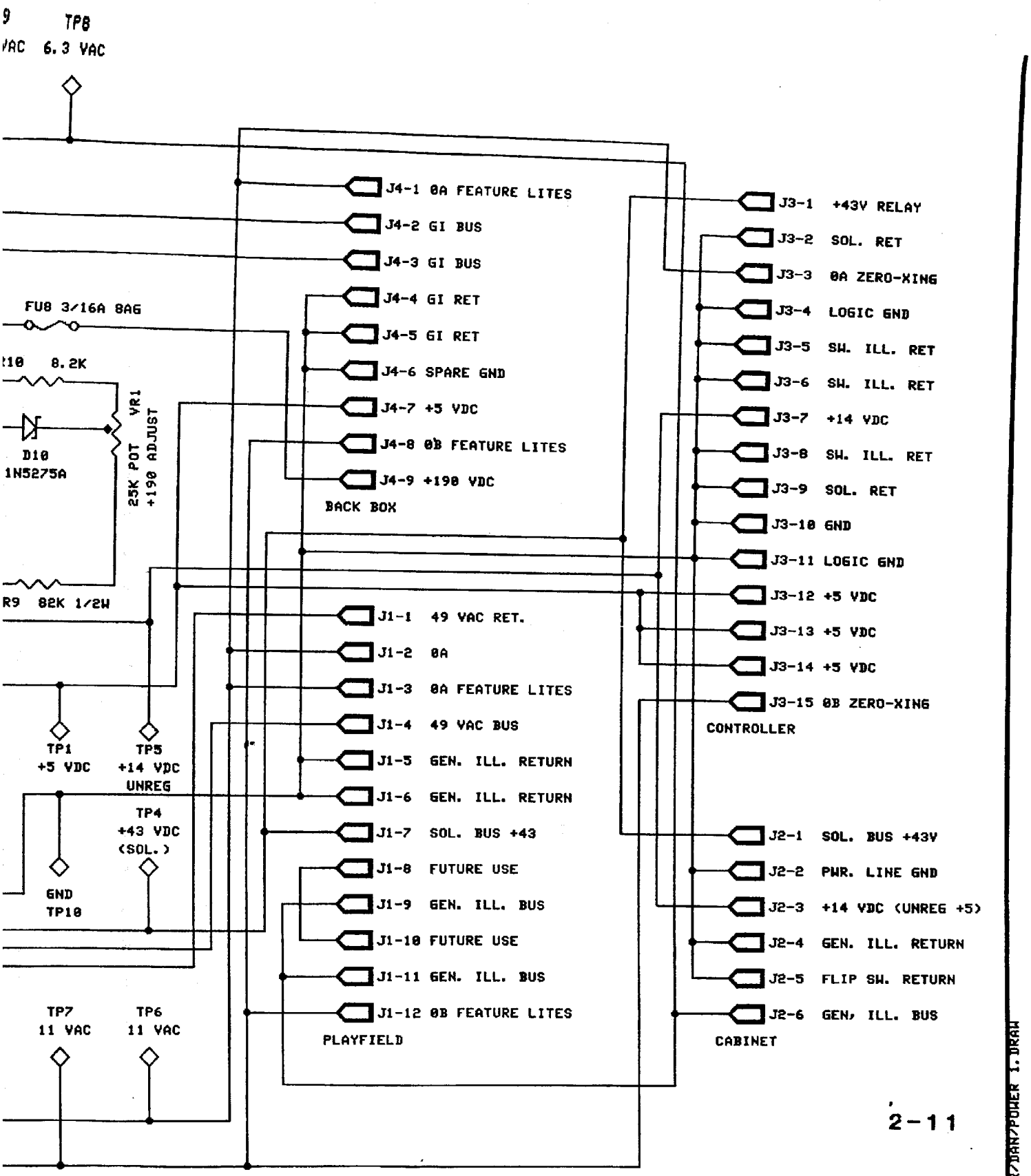

8/14/86 REV 1 CHANGED C6, C7 TO .01 UF. CMM

D FU1 SHOULD BE 6AMP
FU1 SHOULD BE 7AMP

NOTES: R. KOHAN	BALLY MIDWAY MFG. CO.
1PER	6803 PINBALL PWR MODULE
03/11/86	SCHEMATIC DRAWING
	A084-91785-D000
	M051-00C53-D002
	SHEET 1 OF 1 REV

86 09132 /USER/DAN/POWER 1.DRAW

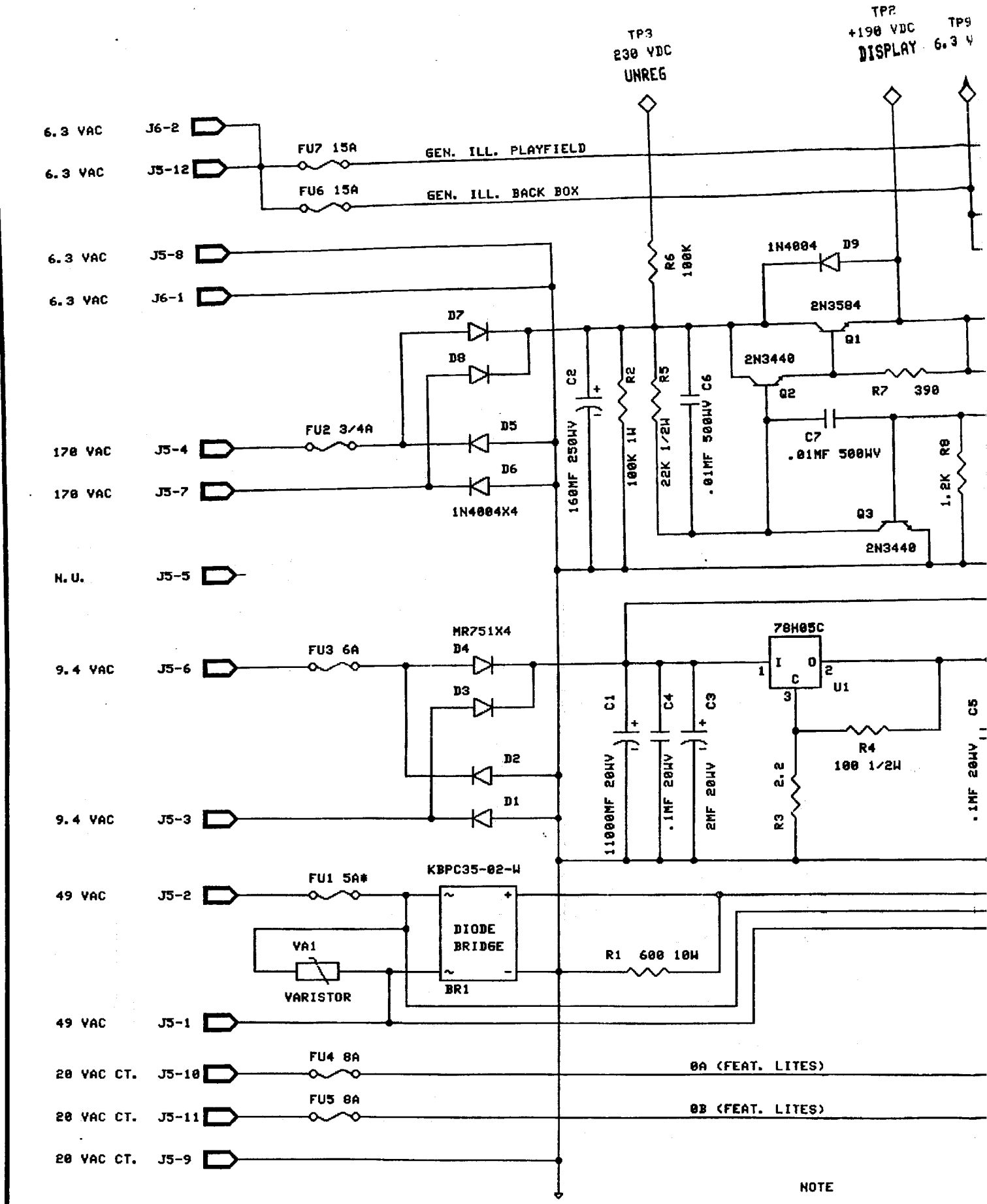
TP3
230 VDC
UNREG
TP2
+190 VDC
DISPLAY
TP9
6.3 V
6.3 VAC
J6-2
6.3 VAC
J5-12
FU7 15A
GEN. ILL. PLAYFIELD
FU6 15A
GEN. ILL. BACK BOX
6.3 VAC
J5-8
6.3 VAC
J6-1
R6
100K
1N4004
D9
2N3584
Q1
D7
D8
C2
160MF 250WV
R2
100K 1W
R5
22K 1/2W
C6
.01MF 500WV
2N3440
Q2
R7
390
C7
.01MF 500WV
R8
1.2K
Q3
2N3440
FU2 3/4A
D5
170 VAC
J5-4
D6
170 VAC
J5-7
1N4004X4
N.U.
J5-5
MR751X4
D4
FU3 6A
9.4 VAC
J5-6
D3
D2
D1
9.4 VAC
J5-3
78H05C
I
O
C
1
2
3
U1
C1
11000MF 20WV
C4
.1MF 20WV
C3
2MF 20WV
R3
2.2
R4
100 1/2W
C5
.1MF 20WV
KBPC35-02-W
FU1 5A*
49 VAC
J5-2
DIODE
BRIDGE
BR1
VA1
VARISTOR
R1
600 10W
49 VAC
J5-1
FU4 8A
20 VAC CT.
J5-10
0A (FEAT. LITES)
FU5 8A
20 VAC CT.
J5-11
0B (FEAT. LITES)
20 VAC CT.
J5-9
NOTE
* WHEN 3FLIPPERS ARE U
WHEN 4FLIPPERS ARE USE

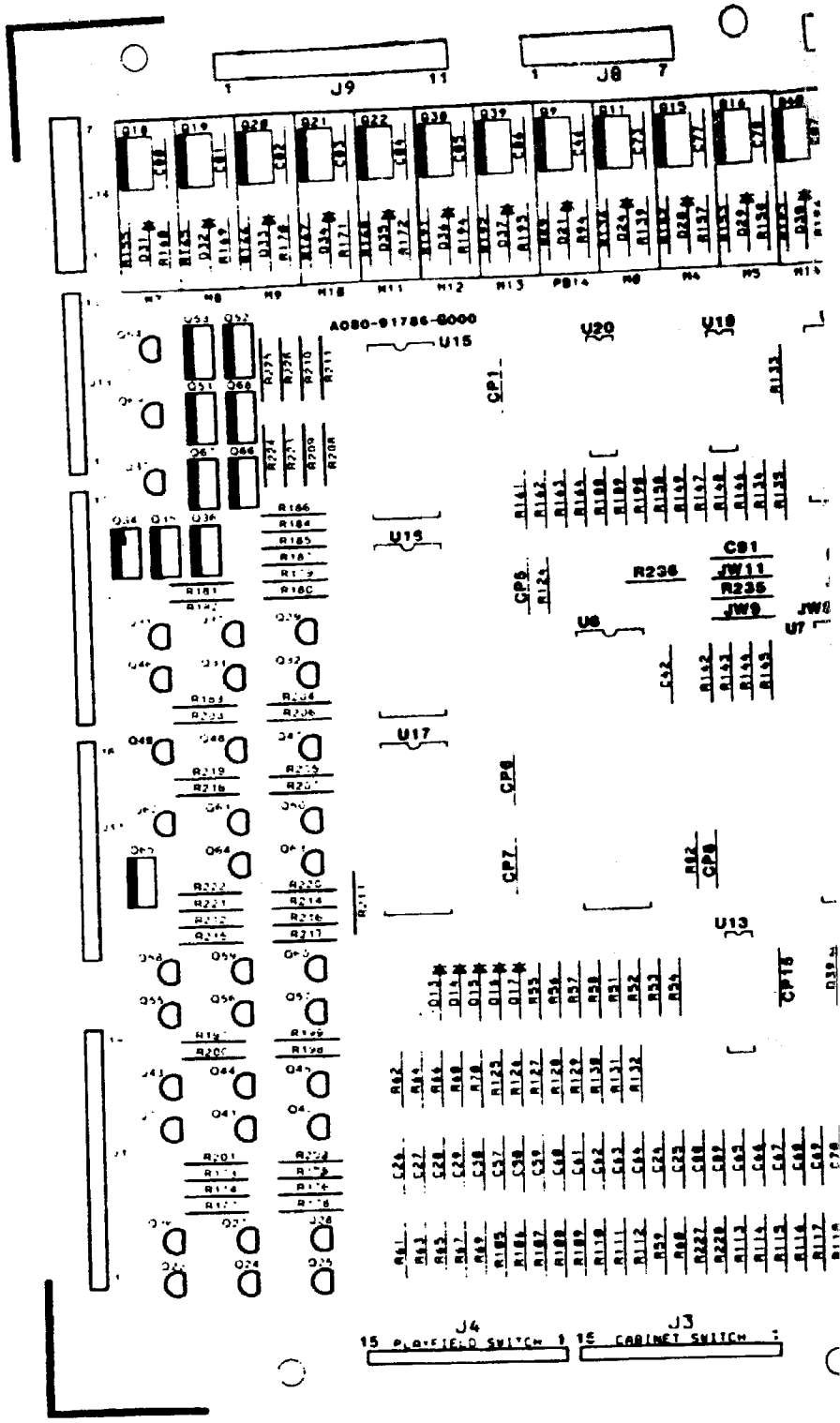

THIS DWG IS

DIM. TOLERANCES	FIRST USED ON		
UNLESS OTHERWISE SPEC.	DRN CL	DATE 04/08/86	SCALE
CONCENTRICITY T.I.R. . 002	MECH CHK	MAT'L	
FRACTIONAL . . . . . ± 1/64			
DECIMAL . . . . . ± .005			
HOLE DIA. . . . + .002 – .000			
ANGLE . . . . . ± 1/2°	ELEC CHK	FINISH	
DO NOT SCALE DWG.			

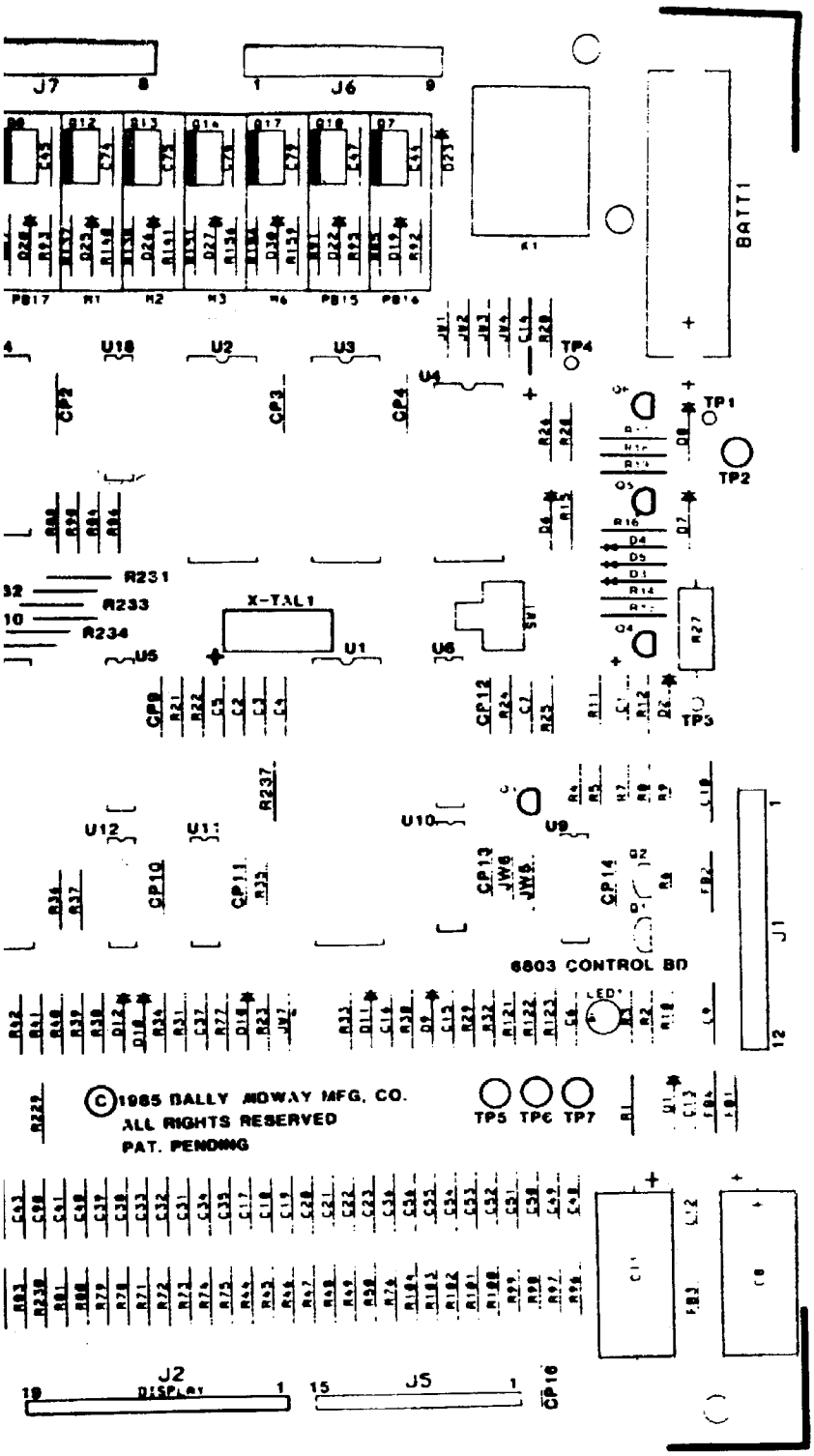

©1985 BALLY MIDWAY MFG. CO.
ALL RIGHTS RESERVED
PAT. PENDING

ONFIDENTIAL & PROPERTY OF MIDWAY MFG CO

MIDWAY MFG. CO.
FRANKLIN PK., IL 60131 A BALLY CO

ASSY DRAWING
6803 CONTROL BD.
A084-91786-G000

REVISIONS

PART NO
M0-5-1-0-0-C-5-3-G-0-0-3

BOARD
-G000
-G003

CROSS REFERENCE LIST

DESCRIPTION	QTY.	DESIGNATION NO.	PART NOS.
7.5 1/4W 5%	1	R5	100E-00005-0085
9.1 1/4W 5%	1	R4	100E-00005-0087
10K 1/4W 5%	4	R12, R13, R30, R33	100E-00005-0088
15K 1/4W 5%	2	R31, R34	100E-00005-0092
39K 1/4W 5%	1	R7	100E-00005-0102
47K 1/4W 5%	2	R10, R11	100E-00005-0104
56K 1/4W 5%	14	R62, R64, R66, R68 R70, R125-R132, R229	100E-00005-0106
62K 1/4W 5%	1	R15	100E-00005-0107
82K 1/4W 5%	1	R14	100E-00005-0112
100K 1/4W 5%	2	R26, R237	100E-00005-0115
270K 1/4W 5%	1	R77	100E-00005-0126
82 OHM 1W 10%	1	R27	100E-00007-0014
IN958B ZENER	1	D1	103E-00001-0002
IN4004	20	D19-D38	103E-00003-0005
IN4148	13	D3, D6, D9-D18, D39	103E-00002-0005
IN4606	5	D2, D4, D5, D7, D8	103E-00002-0006
2N3904	3	Q2, Q4, Q6	104E-00001-0006
2N4403	2	Q3, Q5	104E-00002-0006
2N5060	35	Q23-Q33, Q37, Q41-Q50, Q54-Q64, Q69, Q70	104E-00015-0001
2N5305	1	Q1	104E-00007-0003
MCR106-1	10	Q34-Q36, Q51-Q53 Q65-Q68	0360-00802-0009
SE9302	19	Q7-Q22, Q38-Q40	0360-00802-0008
4011	1	U11	0360-00803-0010
4502	1	U13	0360-00803-0005
4514B	3	U15-U17	0360-00803-0013
4584	1	U12	0066-090BX-XXDX
6116 RAM	1	U4	0365-00803-0013
6803 MPU	1	U1	0360-00803-0048
6821 PIA	2	U7, U8	0360-00803-0017
74LS04	1	U10	0A15-00803-0010
74LS10	1	U9	0A89-00803-0007
75LS154	1	U14	0360-00803-0024
74HCT245	1	U5	0365-00803-0014
74LS373	1	U6	0A89-00803-0006
CA3081	3	U18-U20	0360-00803-0007
3.580 MHz CRYSTAL	1	XTAL-1	109E-00001-0003
LED GREEN	1	LED 1	0017-00007-0131
TEST POINTS	7	TP1-TP7	0017-00007-0131
SWITCH P.B.	1	SW1	0017-00032-0038
BATTERY 3.6V	1	BATT-1	0017-00003-0172
ZERO OHM RES. JUMPER	5	JW2, JW4, JW6, JW8, JW10	117E-00001-0001
RELAY 48VDC	1	K1	114E-00001-0011
40 PIN I.C. SOCKET	3	XU1, XU7, XU8	110E-00001-0011
28 PIN I.C. SOCKET	2	XU2, XU3	110E-00001-0010
24 PIN I.C. SOCKET	1	XU4	110E-00001-0007
FERRITE BEAD	4	FR1-FR4	0316-00804-0002

CROSS REFERENCE LIST

DESCRIPTION	QTY.	DESIGNATION NO.	PART NOS.
27pf 50V CER.	2	C2, C3	0360-00800-0052
47pf 50V CER.	1	C7	0360-00800-0027
390pf 50V CER.	25	C24-C30, C57-C71 C88-C90	0360-00800-0001
470pf 1KV CER.	27	C17-C23, C31-C36, C38-C41, C48-C56, C91	0307-00800-0008
.002uf 1KV CER.	19	C44-C47, C73-C87	0360-00800-0012
.003uf 1KV CER.	1	C43	0360-00800-0025
.01uf 50V CER.	24	C6, C9, C10, C12, C13 C15, C16, C42, CP1-CP16	0365-00800-0014
.05uf 16V CER.	1	C37	0360-00800-0006
.1uf 50V CER.	1	C4	0360-00800-0058
4.7uf 25V TANT	2	C5, C14	0360-00800-0008
6.8uf 25V TANT	1	C1	0360-00800-0048
470uf 16V ELEC	1	C8	0360-00800-0022
470uf 25V ELEC	1	C11	0360-00800-0024
82 OHM 1/4W 5%	1	R9	100E-00005-0031
100 OHM 1/4W 5%	1	R8	100E-00005-0033
110 OHM 1/4W 5%	1	R83	100E-00005-0034
120 OHM 1/4W 5%	21	R24, R85, R87, R89, R91, R121, R136-R138, R151-R155, R165-R168, R191-R193	100E-00005-0035
270 OHM 1/4W 5%	1	R28	100E-00005-0044
330 OHM 1/4W 5%	23	R92-R95, R139-R141, R156-R160, R169-R172, R194-R196, R231-R234	100E-00005-0047
470 OHM 1/4W 5%	9	R96-R104	100E-00005-0051
560 OHM 1/4W 5%	1	R1	100E-00005-0054
680 OHM 1/4W 5%	1	R25	100E-00005-0056
750 OHM 1/4W 5%	1	R19	100E-00005-0057
910 OHM 1/4W 5%	1	R18	100E-00005-0059
1K 1/4W 5%	3	R3, R29, R32	100E-00005-0061
1.2K 1/4W 5%	60	R44-R50, R59-R61, R63, R65, R67, R69, R71-R76 R78-R82, R105-R119, R122 R133-R135, R146-R150, R161-R164, R188-R190, R227, R228, R230, R236	100E-00005-0063
1.5K 1/4W 5%	1	R20	100E-00005-0065
2K 1/4W 5%	46	R123, R173-R187 R197-R226	100E-00005-0068
2.7K 1/4W 5%	2	R2, R6	100E-00005-0071
3K 1/4W 5%	1	R17	100E-00005-0073
3.3K 1/4W 5%	18	R21-R23, R35, R51-R58, R124, R142-R145, R235	100E-00005-0074
3.9K 1/4W 5%	4	R84, R86, R88, R90	100E-00005-0077
4.7K 1/4W 5%	8	R36-R43	100E-00005-0079
5.6 1/4W 5%	1	R16	100E-00005-0082

DESIGNATION LIST

DESIGNATION	DESCRIPTION
C1	6.8UF 25V TANT.
C2,C3	27PF 50V CER.
C4	.1UF 50V CER.
C5	4.7UF 25V TANT.
C6	.01UF 50V CER.
C7	47PF 50V CER.
C8	470UF 16V ELEC.
C9,C10	.01UF 50V CER.
C11	470UF 25V ELEC.
C12,C13	.01UF 50V CER.
C14	4.7UF 25V TANT.
C15,C16	.01UF 50V CER.
C17 - C23	470PF 1KV CER.
C24 - C30	390PF 50V CER.
C31 - C36	470PF 1KV CER.
C37	.05UF 16V CER.
C38 - C41	470PF 1KV CER.
C42	.01UF 50V CER.
C43	.003UF 1KV CER.
C44 - C47	.002UF 1KV CER.
C48 - C56	470PF 1KV CER.
C57 - C71	390PF 50V CER.
C73 - C87	.002 1KV CER.
C88 - C90	390PF 50V CER.
C91	470PF 1KV CER.
CP1 - CP16	.01 50V CER.
R1	560 OHM 1/4W 5%
R2	2.7K 1/4W 5%
R3	1K 1/4W 5%
R4	9.1K 1/4W 5%
R5	7.5K 1/4W 5%
R6	2.7K 1/4W 5%
R7	39K 1/4W 5%
R8	100 OHM 1/4W 5%
R9	82 OHM 1/4W 5%
R10,R11	47K 1/4W 5%
R12,R13	10K 1/4W 5%
R14	82K 1/4W 5%
R15	62K 1/4W 5%
R16	5.6K 1/4W 5%
R17	3K 1/4W 5%
R18	910 OHM 1/4W 5%
R19	750 OHM 1/4W 5%
R20	1.5K 1/4W 5%
R21 - R23	3.3K 1/4W 5%
R24	120 OHM 1/4W 5%
R25	680 OHM 1/4W 5%
R26	100K 1/4W 5%
R27	82 OHM 1W 10%

DESIGNATION	DESCRIPTION
R28	270 OHM 1/4W 5%
R29	1K 1/4W 5%
R30	10K 1/4W 5%
R31	15K 1/4W 5%
R32	1K 1/4W 5%
R33	10K 1/4W 5%
R34	15K 1/4W 5%
R35	3.3K 1/4W 5%
R36 - R43	4.7K 1/4W 5%
R44 - R50	1.2K 1/4W 5%
R51 - R58	3.3K 1/4W 5%
R59 - R61	1.2K 1/4W 5%
R62	56K 1/4W 5%
R63	1.2K 1/4W 5%
R64	56K 1/4W 5%
R65	1.2K 1/4W 5%
R66	56K 1/4W 5%
R67	1.2K 1/4W 5%
R68	56K 1/4W 5%
R69	1.2K 1/4W 5%
R70	56K 1/4W 5%
R71 - R76	1.2K 1/4W 5%
R77	270K 1/4W 5%
R78 - R82	1.2K 1/4W 5%
R83	110 OHM 1/4W 5%
R84	3.9K 1/4W 5%
R85	120 OHM 1/4W 5%
R86	3.9K 1/4W 5%
R87	120 OHM 1/4W 5%
R88	3.9K 1/4W 5%
R89	120 OHM 1/4W 5%
R90	3.9K 1/4W 5%
R91	120 OHM 1/4W 5%
R92 - R95	330 OHM 1/4W 5%
R96 - R104	470 OHM 1/4W 5%
R105 - R119	1.2K 1/4W 5%
R121	120 OHM 1/4W 5%
R122	1.2K 1/4W 5%
R123	2K 1/4W 5%
R124	3.3K 1/4W 5%
R125 - R132	56K 1/4W 5%
R133 - R135	1.2K 1/4W 5%
R136 - R138	120 OHM 1/4W 5%
R139 - R141	330 OHM 1/4W 5%
R142 - R145	3.3K 1/4W 5%
R146 - R150	1.2K 1/4W 5%
R151 - R155	120 OHM 1/4W 5%
R156 - R160	330 OHM 1/4W 5%
R161 - R164	1.2K OHM 1/4W 5%

DES
R165
R169
R173
R188
R191
R194
R197
R227
R229
R230
R231
R235
R236
R237
D1
D2
D3
D4,
D6
D7,
D9 -
D19
D39
Q1
Q2
Q3
Q4
Q5
Q6
Q7 -
Q23
Q34
Q37
Q38
Q41
Q51
Q54
Q65
Q69,
U1
U4
U5
U6
U7,U8
U9
U10
U11
U12
U13
U14

TROL BOARD
786-G000
C53-G003

NATION	DESCRIPTION
· R168	120 OHM 1/4W 5%
· R172	330 OHM 1/4W 5%
· R187	2K 1/4W 5%
· R190	1.2K 1/4W 5%
· R193	120 OHM 1/4W 5%
· R196	330 OHM 1/4W 5%
· R226	2K 1/4W 5%
R228	1.2K 1/4W 5%
	56K 1/4W 5%
	1.2K 1/4W 5%
· R234	330 OHM 1/4W 5%
	3.3K 1/4W 5%
	1.2K 1/4W 5%
	100K OHM 1/4W 5%
	1N958B
	1N4606
	1N4148
	1N4606
	1N4148
	1N4606
018	1N4148
D38	1N4004
	1N4148
	2N5305
	2N3904
	2N4403
	2N3904
	2N4403
	2N3904
022	SE9302
033	2N5060
036	MCR 106-1
	2N5060
Q40	SE9302
Q50	2N5060
Q53	MCR 106-1
Q64	2N5060
Q68	MCR 106-1
0	2N5060
	6803
	6116 RAM
	74HCT245
	74LS373
	6821
	74LS10
	74LS04
	4011
	4584
	4502
	74LS154

DESIGNATION	DESCRIPTION
U15 - U17	4514B
U18 - U20	CA3081
XTAL-1	3.580 MHZ CRYSTAL
LED 1	LED GREEN
TP1 - TP7	TEST POINTS
SW1	SWITCH P.B.
BATT-1	BATTERY 3.6V
JW2	ZERO OHM RES. JUMPER
JW4	ZERO OHM RES. JUMPER
JW6	ZERO OHM RES. JUMPER
JW8	ZERO OHM RES. JUMPER
JW10	ZERO OHM RES. JUMPER
K1	RELAY 48V DC
XU1,XU7,XU8	40 PIN IC SOCKET
XU2, XU3	28 PIN IC SOCKET
XU4	24 PIN IC SOCKET
FB1 - FB4	FERRITE BEAD
J1	11 - .045 SQ. PINS
J2	18 - .025 SQ. PINS
J3	14 - .025 SQ. PINS
J4	14 - .025 SQ. PINS
J5	14 - .025 SQ. PINS
J6	8 - .045 SQ. PINS
J7	7 - .045 SQ. PINS
J8	6 - .045 SQ. PINS
J9	10 - .045 SQ. PINS
J10	18 - .025 SQ. PINS
J11	17 - .025 SQ. PINS
J12	16 - .025 SQ. PINS
J13	12 - .025 SQ. PINS
J14	5 - .045 SQ. PINS
P/O BATT-1	TY-WRAP
6803 CONTROL BD.	P.C. BOARD

6803 CONTROL BOARD
A084-91786-G000
M051-000C53-G003

CROSS REFERENCE LIST

DESCRIPTION	QTY.	DESIGNATION NO.	PART NOS.
.025 SQ. PINS	123	J2, J3, J4, J5, J10, J11, J12, J13	0304-00804-0009
.045 SQ. PINS	47	J1, J6, J7, J8, J9, J14	0304-00804-0010
TY-WRAP	1	P/O BATT-1	0017-00042-0622
P.C. BOARD	1	6803 CONTROL BOARD	A080-91786-G000

4-23-86 REV. 1.0 Fixed Part Number for 470PF Cap.

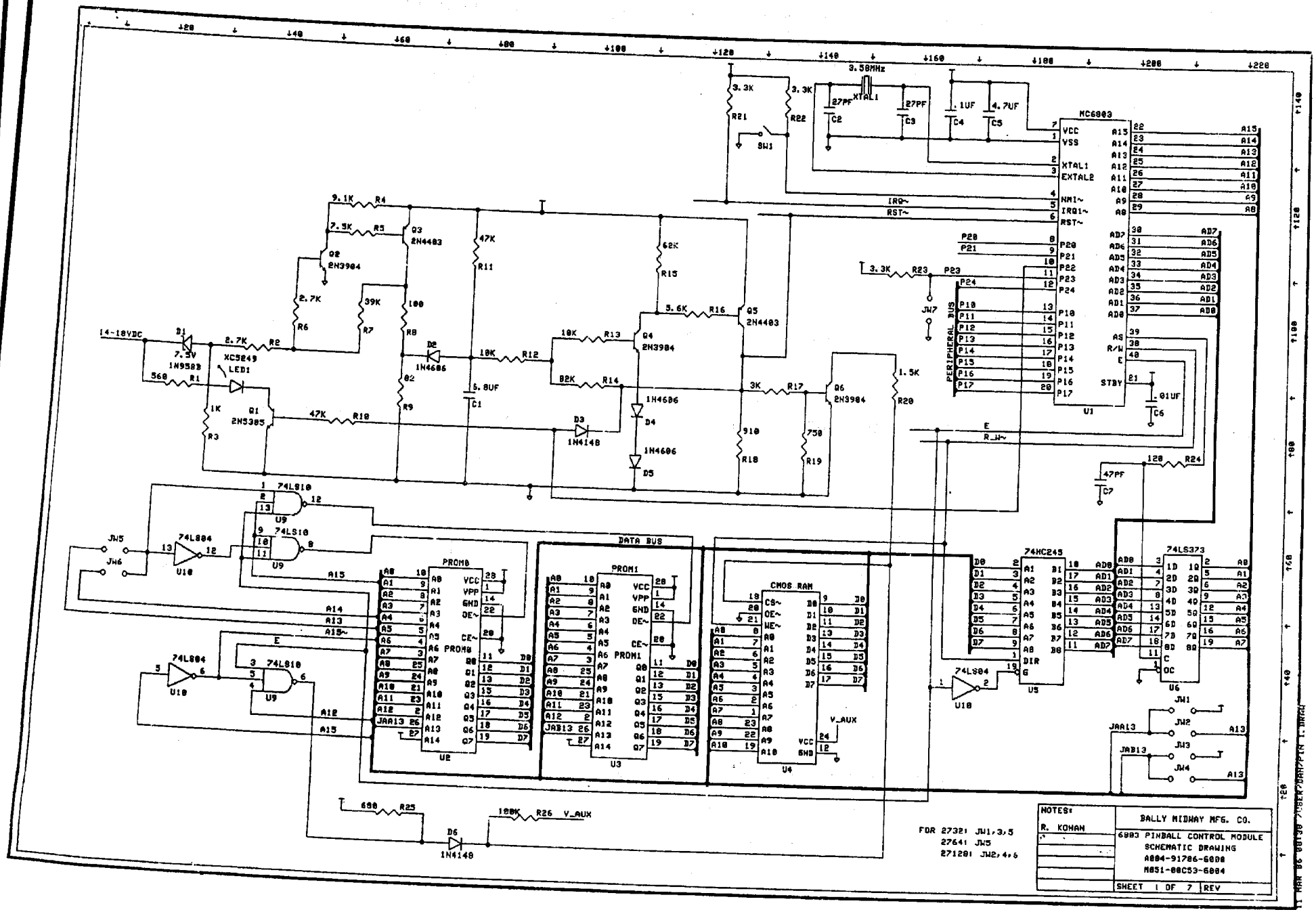
MC6803
U1
PROM0
U2
PROM1
U3
CMOS RAM
U4
74HC245
U5
74LS373
U6
74LS10
74LS04
DATA BUS
PERIPHERAL BUS
3.58MHz
XTAL1
14-18VDC
XC5249
LED1
SW1
JW5
JW6
JW7
JW1
JW2
JW3
JW4
IRQ~
RST~
R_W~
V_AUX
FOR 27321 JW1,3,5
27641 JW5
271281 JW2,4,6
NOTES:
R. KONAN
BALLY MIDWAY MFG. CO.
6803 PINBALL CONTROL MODULE
SCHEMATIC DRAWING
A804-91786-6000
M651-00C53-6004
SHEET 1 OF 7
REV

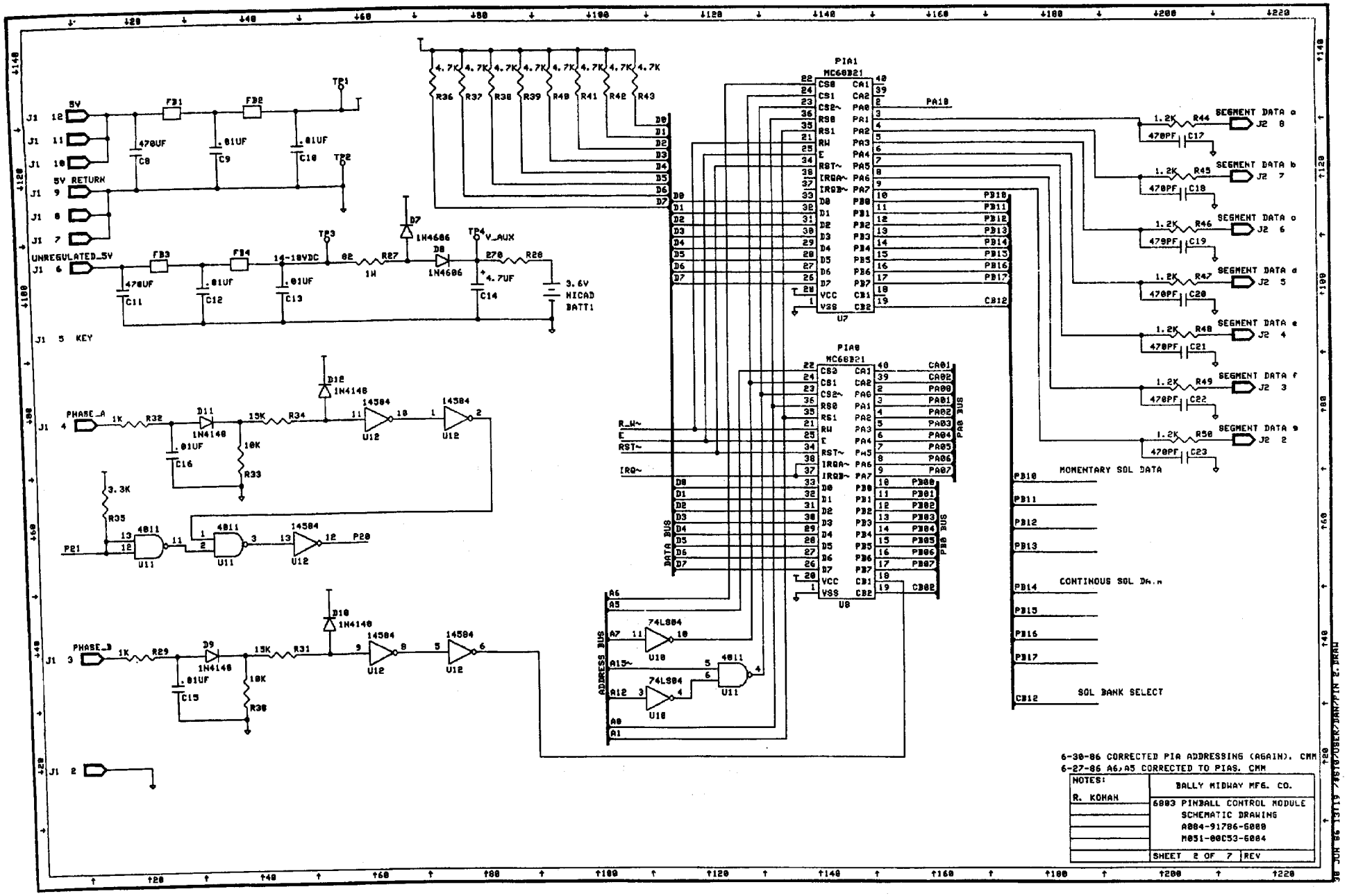
5V
5V RETURN
UNREGULATED_5V
KEY
FB1
FB2
FB3
FB4
470UF
.01UF
C8
C9
C10
C11
C12
C13
TP1
TP2
TP3
TP4
14-18VDC
R27
1W
D7
1N4686
D8
1N4686
V_AUX
R28
4.7UF
C14
3.6V
NICAD
BATT1
4.7K
R36
R37
R38
R39
R40
R41
R42
R43
PIA1
MC68B21
U7
PIA8
MC68B21
U8
DATA BUS
ADDRESS BUS
PA0 BUS
PB0 BUS
R_W~
E
RST~
IRQ~
PHASE_A
PHASE_B
1K
R32
R29
D11
D9
1N4148
15K
R34
R31
10K
R33
R30
C16
C15
D12
D10
14584
U12
4011
U11
74LS04
U10
3.3K
R35
P21
P20
SEGMENT DATA a
SEGMENT DATA b
SEGMENT DATA c
SEGMENT DATA d
SEGMENT DATA e
SEGMENT DATA f
SEGMENT DATA g
1.2K
R44
R45
R46
R47
R48
R49
R50
470PF
C17
C18
C19
C20
C21
C22
C23
J2
MOMENTARY SOL DATA
CONTINOUS SOL DATA
SOL BANK SELECT
6-30-86 CORRECTED PIA ADDRESSING (AGAIN). CMM
6-27-86 A6,A5 CORRECTED TO PIAS. CMM
NOTES:
R. KOHAN
BALLY MIDWAY MFG. CO.
6803 PINBALL CONTROL MODULE
SCHEMATIC DRAWING
A804-91786-6080
M051-00C53-6084
SHEET 2 OF 7
REV

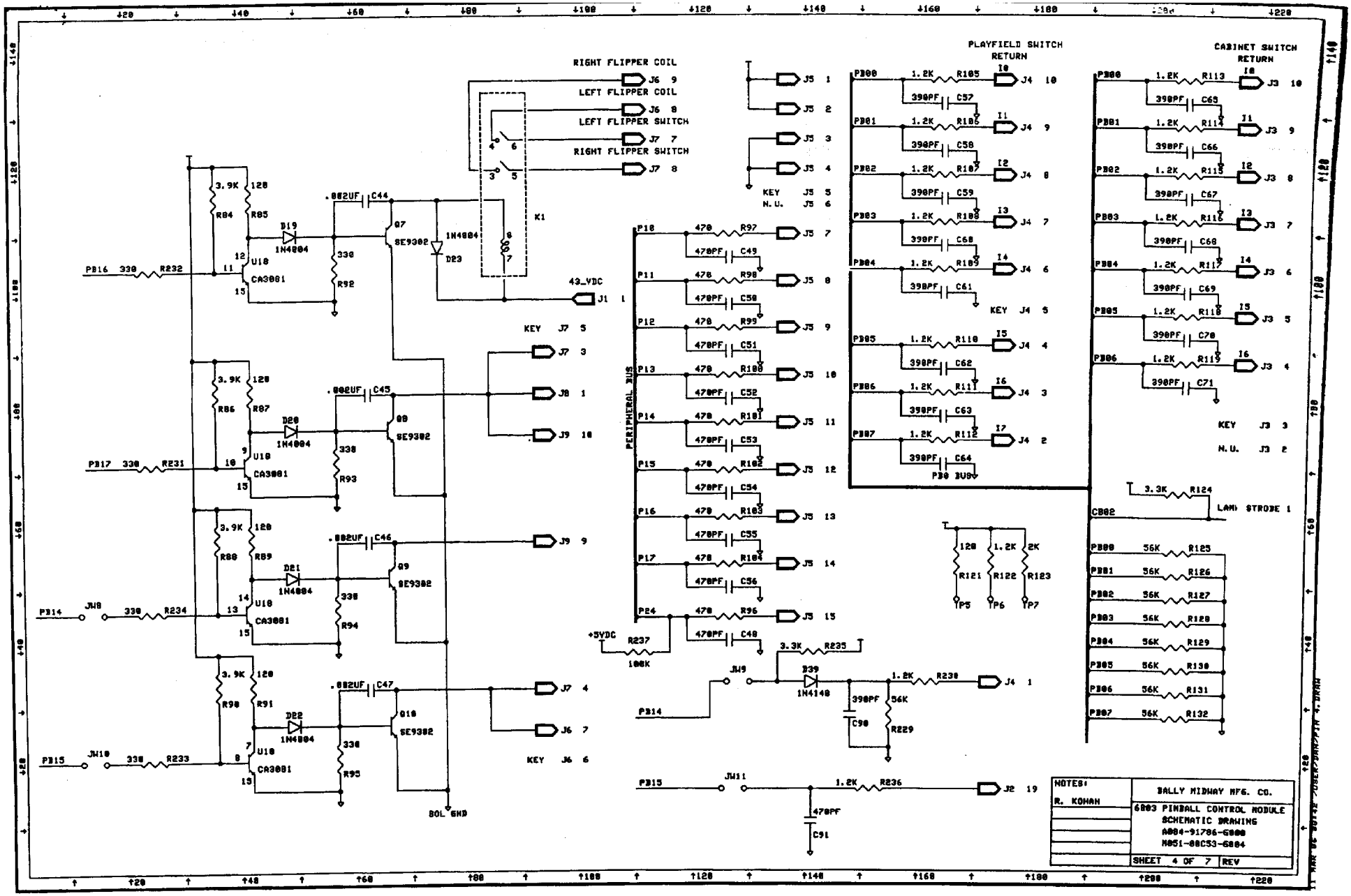
RIGHT FLIPPER COIL
LEFT FLIPPER COIL
LEFT FLIPPER SWITCH
RIGHT FLIPPER SWITCH
PLAYFIELD SWITCH RETURN
CABINET SWITCH RETURN
43_VDC
PERIPHERAL BUS
LAMP STROBE 1
BOL GND
NOTES:
R. KOHAN
BALLY MIDWAY MFG. CO.
6803 PINBALL CONTROL MODULE
SCHEMATIC DRAWING
A804-91786-6800
N051-08C53-6804
SHEET 4 OF 7
REV

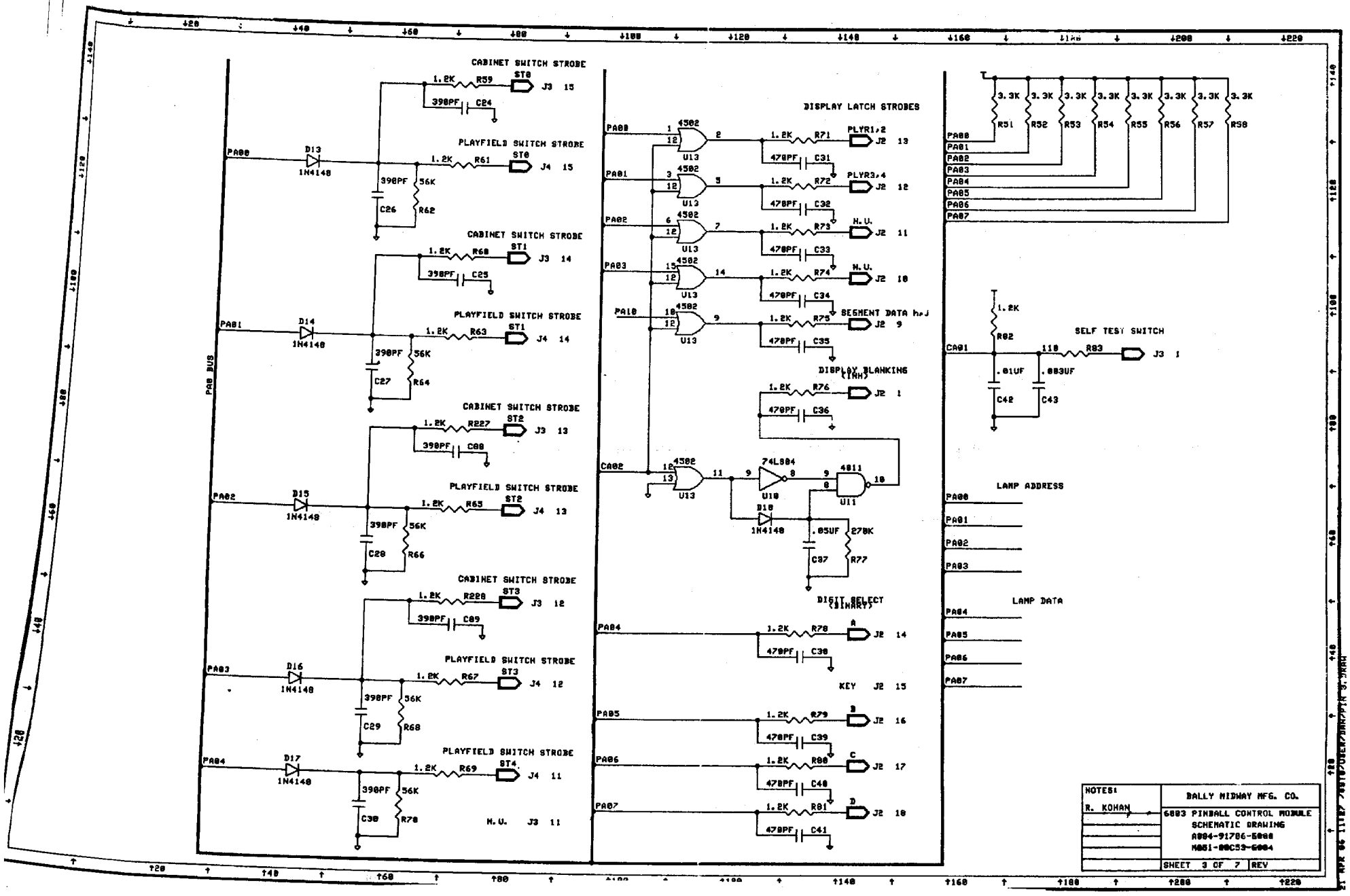
CABINET SWITCH STROBE
PLAYFIELD SWITCH STROBE
DISPLAY LATCH STROBES
SELF TEST SWITCH
LAMP ADDRESS
LAMP DATA
DISPLAY BLANKING (INH)
DIGIT SELECT (BINARY)
KEY J2 15
PAB BUS
NOTES:
R. KOHAN
BALLY MIDWAY MFG. CO.
6803 PINBALL CONTROL MODULE
SCHEMATIC DRAWING
SHEET 3 OF 7
REV

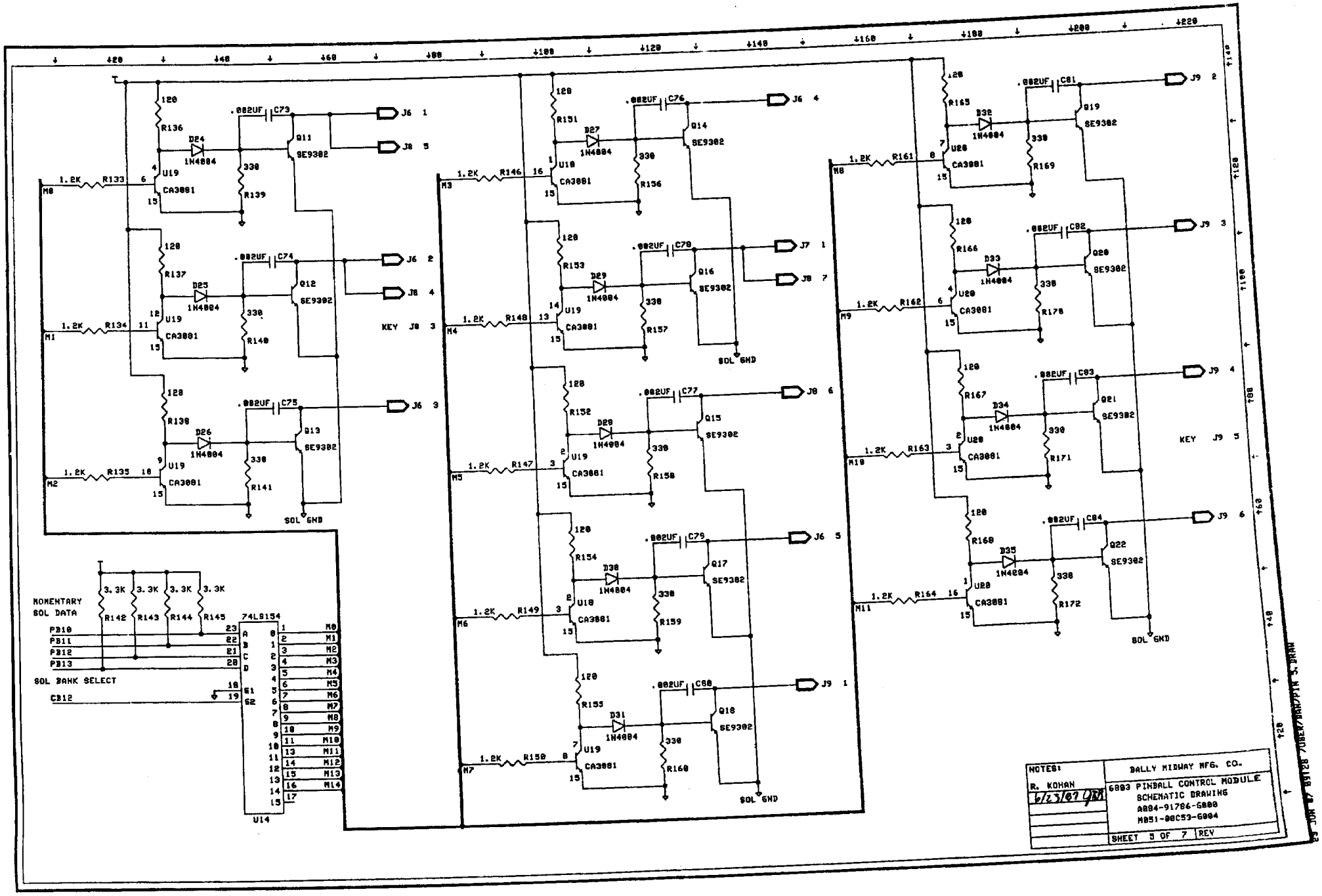
MOMENTARY SOL DATA
PB10
PB11
PB12
PB13
SOL BANK SELECT
CB12
74LS154
U14
3.3K
R142
R143
R144
R145
M0
M1
M2
M3
M4
M5
M6
M7
M8
M9
M10
M11
M12
M13
M14
KEY J8 3
KEY J9 5
SOL GND
J6 1
J6 2
J6 3
J6 4
J6 5
J7 1
J8 1
J8 2
J8 3
J8 4
J8 5
J8 6
J8 7
J9 1
J9 2
J9 3
J9 4
J9 5
J9 6
NOTES:
R. KOHAN
6/23/87
BALLY MIDWAY MFG. CO.
6803 PINBALL CONTROL MODULE
SCHEMATIC DRAWING
A804-91786-S800
M851-00C53-S004
SHEET 5 OF 7
REV

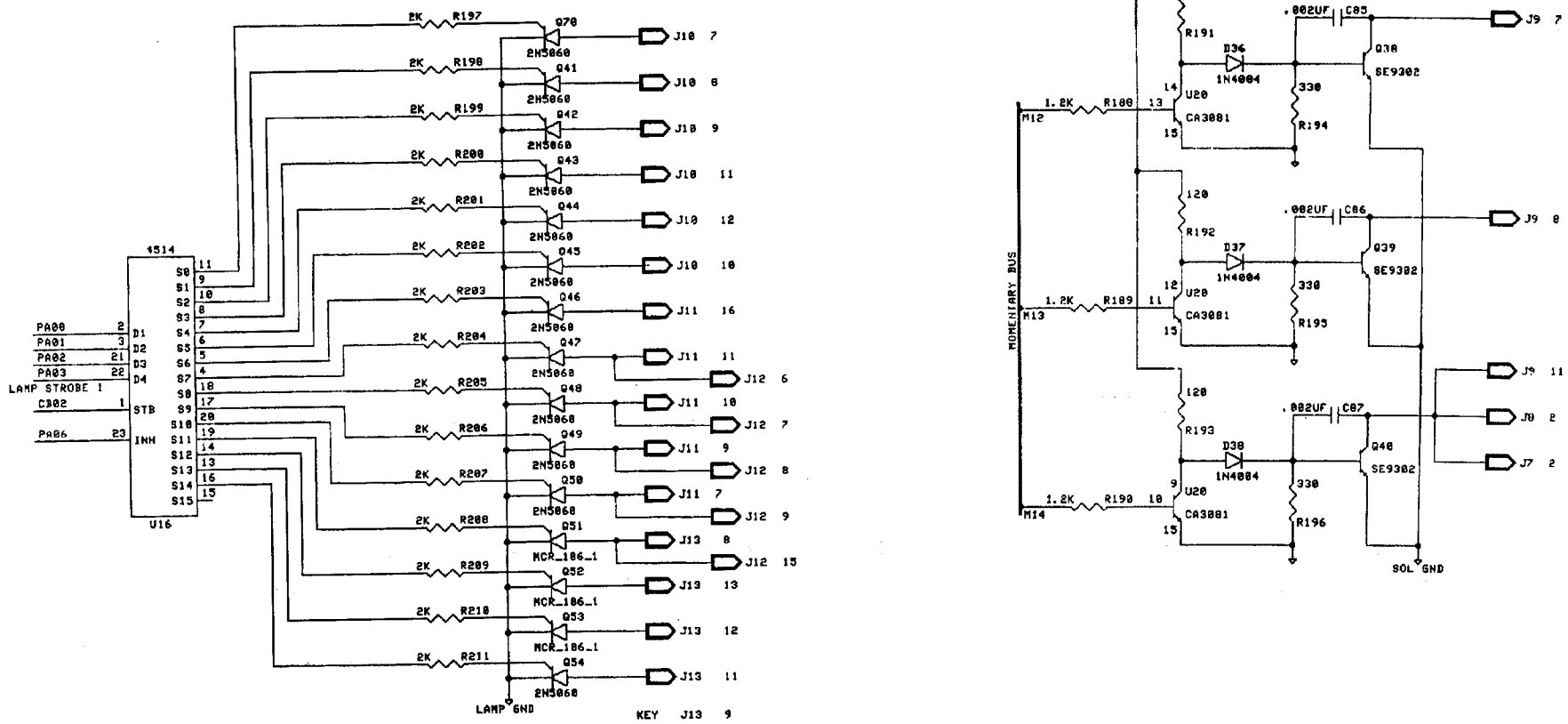

NOTES:	BALLY MIDWAY MFG. CO.
R. KOMAN	6803 PINBALL CONTROL MODULE SCHEMATIC DRAWING A884-91786-G000 M851-00C53-G004
	SHEET 6 OF 7 REV

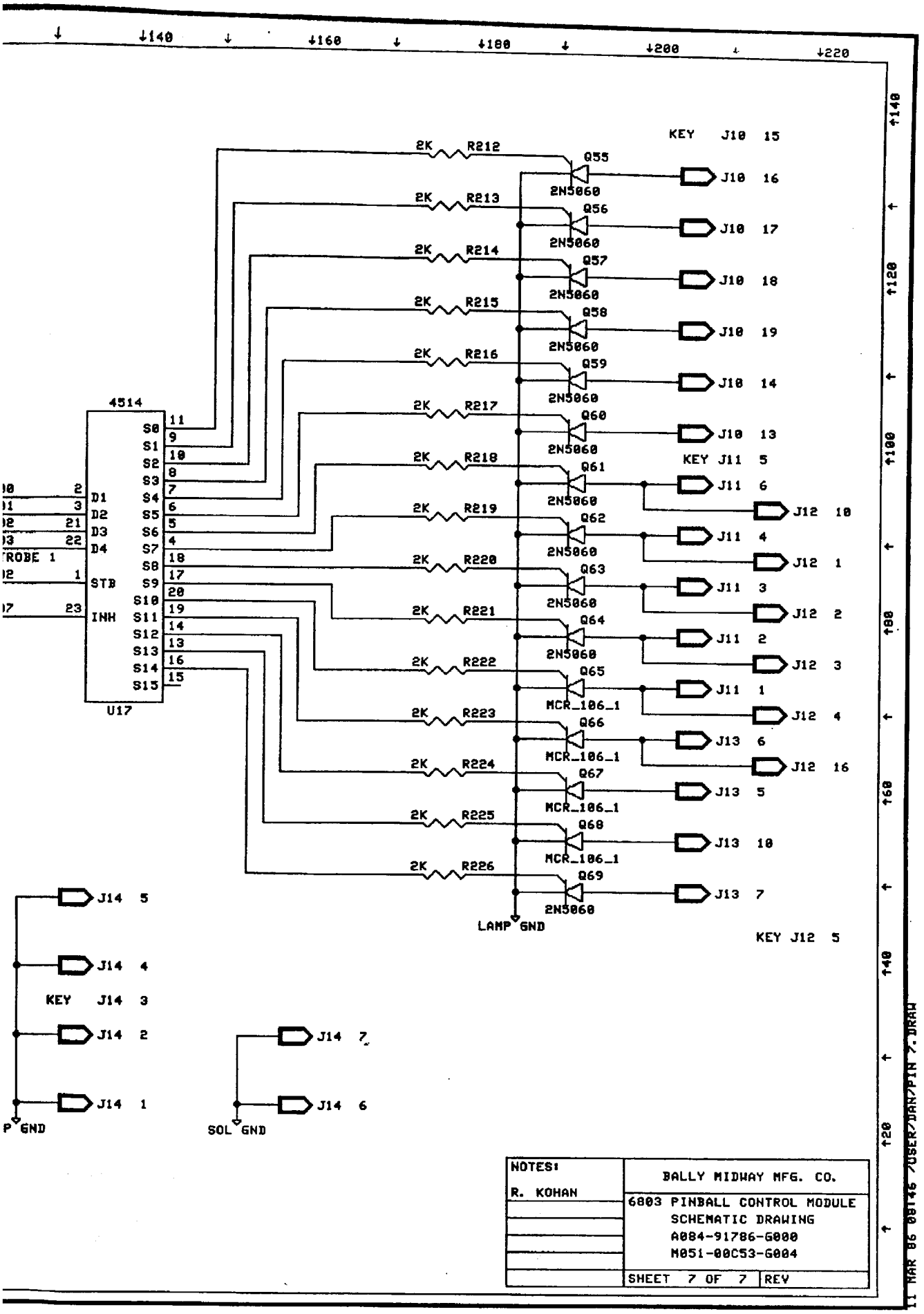
4514
U17
D1
D2
D3
D4
STB
INH
S0
S1
S2
S3
S4
S5
S6
S7
S8
S9
S10
S11
S12
S13
S14
S15
2K R212
2K R213
2K R214
2K R215
2K R216
2K R217
2K R218
2K R219
2K R220
2K R221
2K R222
2K R223
2K R224
2K R225
2K R226
Q55 2N5060
Q56 2N5060
Q57 2N5060
Q58 2N5060
Q59 2N5060
Q60 2N5060
Q61 2N5060
Q62 2N5060
Q63 2N5060
Q64 2N5060
Q65 MCR_106_1
Q66 MCR_106_1
Q67 MCR_106_1
Q68 MCR_106_1
Q69 2N5060
LAMP GND
KEY J10 15
J10 16
J10 17
J10 18
J10 19
J10 14
J10 13
KEY J11 5
J11 6
J12 10
J11 4
J12 1
J11 3
J12 2
J11 2
J12 3
J11 1
J12 4
J13 6
J12 16
J13 5
J13 10
J13 7
KEY J12 5
J14 5
J14 4
KEY J14 3
J14 2
J14 1
J14 7
J14 6
SOL GND
NOTES:
R. KOHAN
BALLY MIDWAY MFG. CO.
6803 PINBALL CONTROL MODULE
SCHEMATIC DRAWING
A084-91786-G000
M051-00C53-G004
SHEET 7 OF 7
REV
11 MAR 86 08:46 /USER/DAN/PIN 7.DRAW

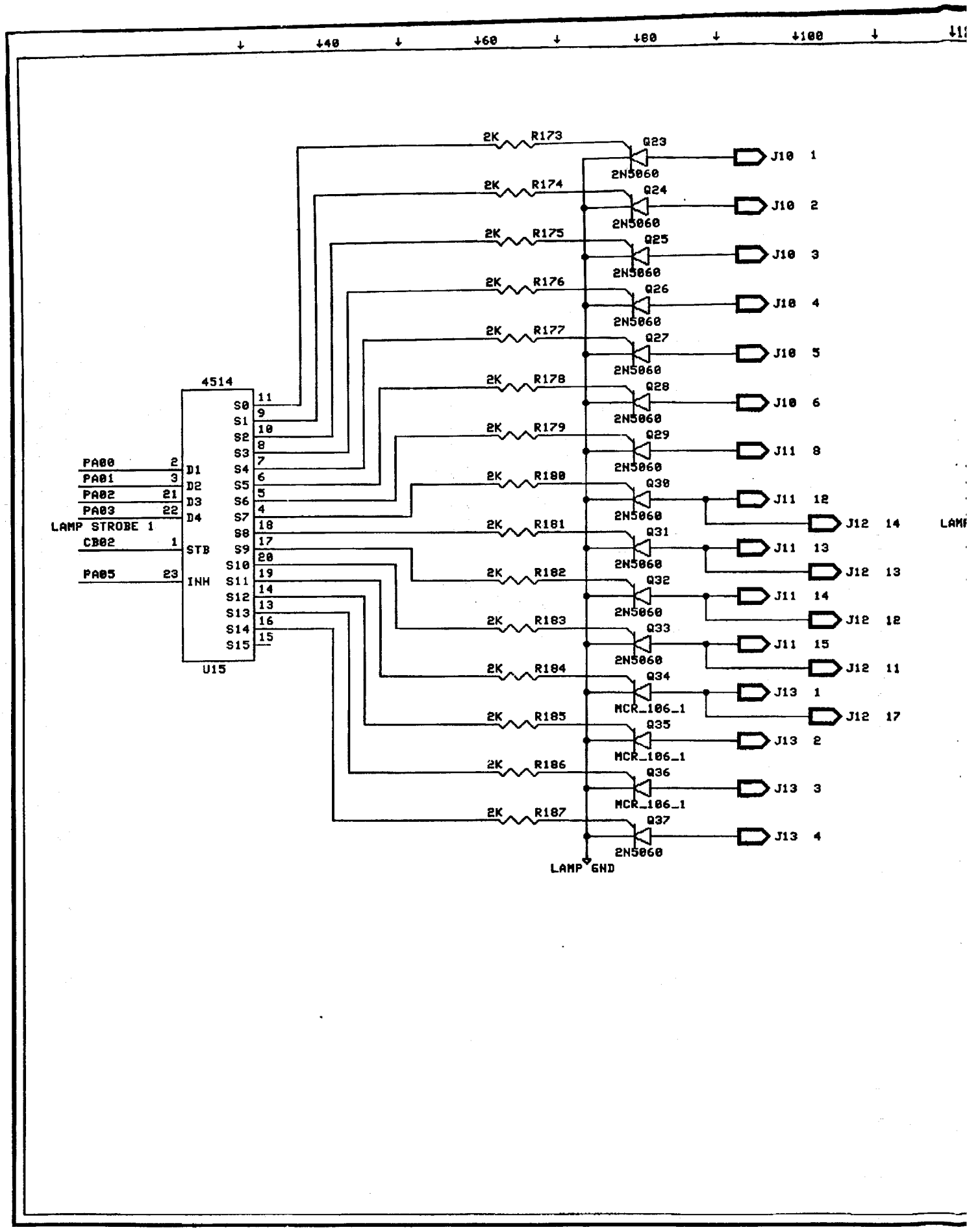
4514
U15
PA00 2
PA01 3
PA02 21
PA03 22
LAMP STROBE 1
CB02 1
PA05 23
D1
D2
D3
D4
STB
INH
S0 11
S1 9
S2 10
S3 8
S4 7
S5 6
S6 5
S7 4
S8 18
S9 17
S10 20
S11 19
S12 14
S13 13
S14 16
S15 15
2K R173
2K R174
2K R175
2K R176
2K R177
2K R178
2K R179
2K R180
2K R181
2K R182
2K R183
2K R184
2K R185
2K R186
2K R187
Q23 2N5060
Q24 2N5060
Q25 2N5060
Q26 2N5060
Q27 2N5060
Q28 2N5060
Q29 2N5060
Q30 2N5060
Q31 2N5060
Q32 2N5060
Q33 2N5060
Q34 MCR_106_1
Q35 MCR_106_1
Q36 MCR_106_1
Q37 2N5060
LAMP GND
J10 1
J10 2
J10 3
J10 4
J10 5
J10 6
J11 8
J11 12
J12 14
J11 13
J12 13
J11 14
J12 12
J11 15
J12 11
J13 1
J12 17
J13 2
J13 3
J13 4

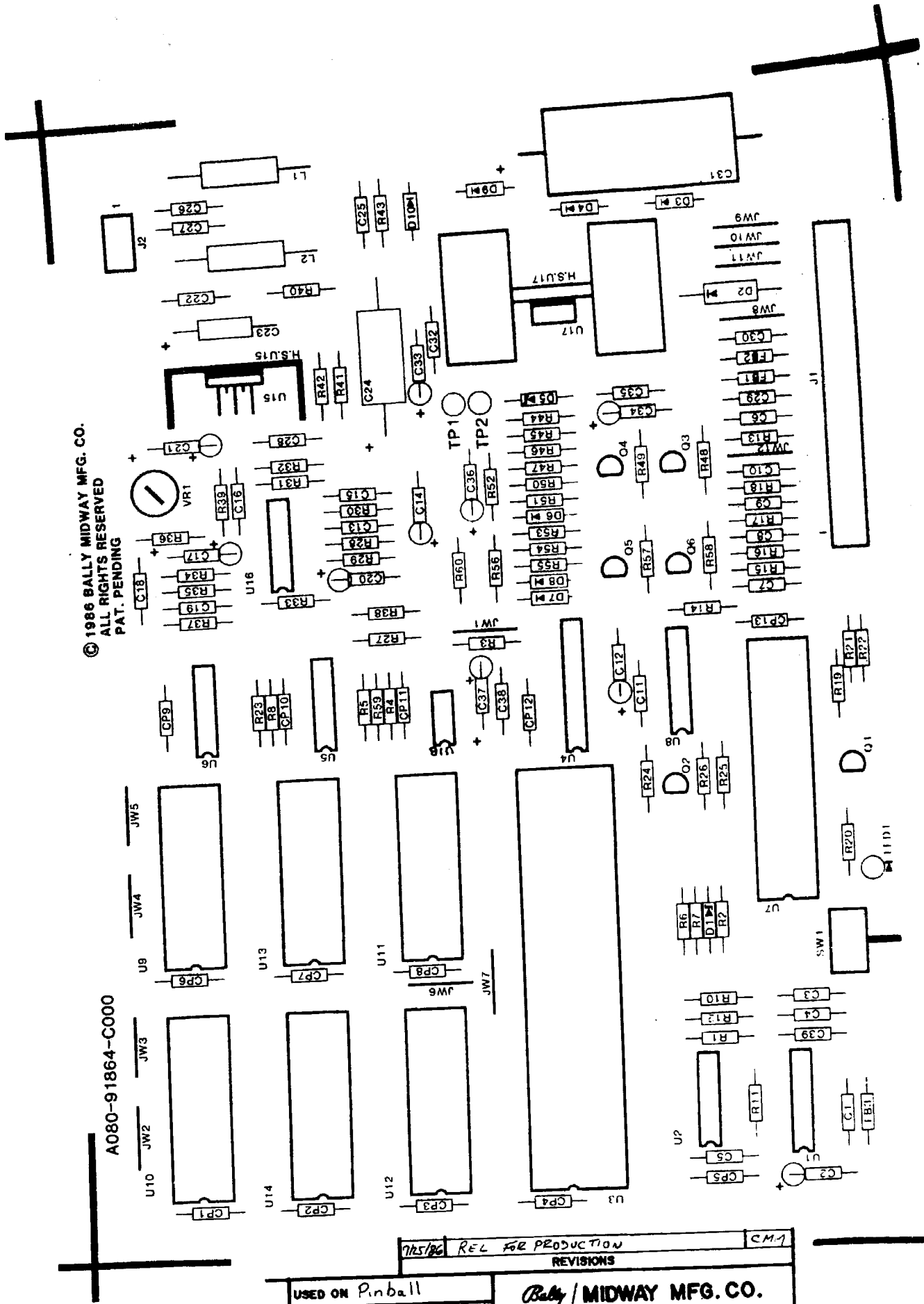

7/25/86	REL FOR PRODUCTION	CMA

REVISIONS

USED ON Pinball

NO. REQ'D

SCALE

Bally / MIDWAY MFG. CO.
FRANKLIN PK. ILL

ASSEMBLY DRAWING
SOUNDS DELUXE P.C.BD.
A084-91864-C000

PART NO. M051-00114-C153

DESIGNATION

DESIGNATION

CP1,CP2
CP3-CP13
C1
C2
C3-C5
C6
C7-C10
C11
C12
C13
C14
C15
C16
C17
C18
C19
C20
C21
C22
C23
C24
C25
C26,C27
C28-C30
C31
C32
C33,C34
C35
C36
C37
C38
C39

D1
D2
D3,D4
D5-D8
D9,D10

FB1-FB3

HS U15
HS U17

ICS U3
ICS U4
ICS U7
ICS U8
ICS U9-U14

LIST

DESCRIPTION
.1 UF AX CER
.01 UF AX CER
.1 UF AX CER
10 UF RD TANT
NOT INSERTED
470 PF AX CER
100 PF AX CER
.01 UF AX CER
47 UF AX ELEC
470 PF AX CER
1 UF AX TANT
.01 UF AX CER
68 PF AX CER
.1 UF AX TANT
.001 UF AX CER
82 PF AX CER
10 UF AX TANT
1 UF AX TANT
.05 UF RD CER
470 UF AX ELEC
1000 UF AX ELEC
.1 UF AX CER
.22 UF AX CER
.1 UF AX CER
4700 UF AX ELEC
.01 UF AX CER
4.7 UF RD TANT
.01 UF AX CER
NOT INSERTED
10 UF AX TANT
.01 UF AX CER
.1 UF AX CER
NOT INSERTED
VR330
1N4004
NOT INSERTED
1N4004
FERRITE BEAD
HEATSINK TO-220
HEATSINK TO-220
64 PIN I.C. SOCKET
20 PIN I.C. SOCKET
40 PIN I.C. SOCKET
16 PIN I.C. SOCKET
28 PIN I.C. SOCKET

SOUNDS DELUXE
A084-91864-C000
M051-00114-C154 Rev. 4

DESIGNATION LIST

DESIGNATION	DESCRIPTION
INS U15, INS U17	SIL PAD THERMAL WASHER
J1,J2	AUTO INSERT PIN TIN .045 SQ.
JW1-JW12	JUMPER WIRE
L1,L2	10 UH INDUCTOR
LED 1	GREEN LED
MH U15	SCREW, 6-32
MH U15	NUT, 6-32
MH U15	WASHER, #6 STAR
MH U17	SCREW, 4-40
MH U17	NUT, 4-40
MH U17	WASHER, #4 STAR
Q1,Q2	2N5305
Q3-Q6	NOT INSERTED
R1-R8	4.7K OHM 1/4W CRBN
R9	NOT USED
R10-R12	NOT INSERTED
R13	10K OHM 1/4W CRBN
R14	100K OHM 1/4W CRBN
R15-R18	10K OHM 1/4W CRBN
R19	47K OHM 1/4W CRBN
R20	100 OHM 1/4W CRBN
R21-R23	4.7K OHM 1/4W CRBN
R24	2.7K OHM 1/4W CRBN
R25	180 OHM 1/4W CRBN
R26	68 OHM 1/4W CRBN
R27	62K OHM 1/4W CRBN
R28	120K OHM 1/4W CRBN
R29	75K OHM 1/4W CRBN
R30	33K OHM 1/4W CRBN
R31	18K OHM 1/4W CRBN
R32	33K OHM 1/4W CRBN
R33	47K OHM 1/4W CRBN
R34	150K OHM 1/4W CRBN
R35	82K OHM 1/4W CRBN
R36	150K OHM 1/4W CRBN
R37	200K OHM 1/4W CRBN
R38	1K OHM 1/4W CRBN
R39	33K OHM 1/4W CRBN
R40	430 OHM 1/4W CRBN
R41	220 OHM 1/4W CRBN
R42	2.2 OHM 1/4W CRBN

SOUNDS DELUXE
A084-91864-C000
M051-00114-C154 Rev. 4

	QTY.	DESIGNATION	PART NUMBER
	1	C16	0360-00800-0028
	1	C19	0E47-00800-0002
	4	C7-C10	0360-00800-0046
0%	2	C6,C13	0307-00800-0008
10%	1	C18	0E47-00800-0003
0%	1	C15	0E47-00800-0001
	15	CP3-CP13,C11,C32 C35,C38	0360-00800-0005
	1	C22	0360-00800-0006
	8	CP1,CP2,C1,C25, C28-C30,C39	0360-00800-0058
	2	C26,C27	0360-00800-0057
	3	C14,C17,C21	0986-00800-1400
	2	C33,C34	0360-00800-0008
	3	C2,C20,C37	0986-00800-0700
	1	C12	0360-00800-0042
	1	C23	0360-00800-0021
	1	C24	0360-00800-0044
	1	C31	0360-00800-0023
	1	R43	100E-00005-0002
BN	1	R42	100E-00005-0003
N	1	R26	100E-00005-0029
BN	1	R20	100E-00005-0033
BN	1	R25	100E-00005-0039
BN	1	R41	100E-00005-0041
BN	1	R40	100E-00005-0050
N	1	R38	100E-00005-0061
RBN	1	R24	100E-00005-0071
RBN	12	R1-R8,R21-R23,R59	100E-00005-0079
BN	6	R13,R15-R18,R60	100E-00005-0088
BN	1	R31	100E-00005-0093
BN	3	R30,R32,R39	100E-00005-0100
BN	2	R19,R33	100E-00005-0104
BN	1	R27	100E-00005-0107
BN	1	R29	100E-00005-0110
BN	1	R35	100E-00005-0112
RBN	1	R14	100E-00005-0115
RBN	1	R28	100E-00005-0118
RBN	2	R34,R36	100E-00005-0120
RBN	1	R37	100E-00005-0123
	1	VR1	0360-00804-0024
	4	D3,D4,D9,D10	103E-00003-0005
	1	D2	0360-00801-0007

SOUNDS DELUXE
A084-91864-C000
M051-00114-C154 Rev. 4

DESIGNATION LIST

DESIGNATION	DESCRIPTION
R43	1 OHM 1/4W CRBN
R44-R58	NOT INSERTED
R59	4.7K OHM 1/4W CRBN
R60	10K OHM 1/4W CRBN
SW1	PC MTG. SWITCH
TP1,TP2	TEST POINT
U1	16 MHZ COSC
U2	74LS74
U3	MC68000G8 CPU
U4	PAL16L8A-2 SD00R0
U5	74LS05
U6	74F32
U7	MC6821
U8	AD7533 DAC
U9,U10	RAM 2K X 8
U11-U14	ROM/EPROM
U15	TDA2002
U16	LM3900
U17	MC7805 REG.
U18	TL7705
VR1	10K POT.

CROSS REFERENC

DESCRIPTION
68 PF AX CER
82 PF AX CER
100 PF AX CER
470 PF AX CER
.001 UF AX CE
.01 UF AX CER
.01 UF AX CER
.05 UF RD CER
.1 UF AX CER
.22 UF AX CER
1 UF AX TANT
4.7 UF RD TAN
10 UF AX TANT
47 UF AX ELEC
470 UF AX ELE
1000 UF AX EL
4700 UF AX EL
1 OHM 1/4W CR
2.2 OHM 1/4W
68 OHM 1/4W C
100 OHM 1/4W
180 OHM 1/4W
220 OHM 1/4W
430 OHM 1/4W
1K OHM 1/4W C
2.7K OHM 1/4W
4.7K OHM 1/4W
10K OHM 1/4W
18K OHM 1/4W
33K OHM 1/4W
47K OHM 1/4W
62K OHM 1/4W
75K OHM 1/4W
82K OHM 1/4W
100K OHM 1/4W
120K OHM 1/4W
150K OHM 1/4W
200K OHM 1/4W
10K POT
1N4004
VR330

SOUNDS DELUXE
A084-91864-C000
M051-00114-C154

CROSS REFERENCE

DESCRIPTION	QTY.	DESIGNATION	PART NUMBER
2N5305	2	Q1,Q2	0360-00802-0012
74F32	1	U6	0304-00803-0059
74LS05	1	U5	0E47-00803-0002
74LS74	1	U2	0304-00803-0058
AD7533 DAC	1	U8	0304-00803-0055
16 MHZ COSC	1	U1	0304-00804-0008
LM3900	1	U16	0360-00803-0002
MC6821	1	U7	0304-00803-0054
MC68000 G8 CPU	1	U3	
MC7805 REG	1	U17	0360-00803-0050
PAL16L8A-2 SD00R0	1	U4	0E47-00803-0001
RAM 2K X 8	2	U9,U10	0E47-00803-0003
TDA2002	1	U15	0360-00803-0009
TL7705AC	1	U18	0066-447BX-XXCX
ROM/EPROM	4	U11-U14	SEE ROM/EPROM SHEET
FERRITE BEAD	3	FB1-FB3	0316-00804-0002
10 UH INDUCTOR	2	L1,L2	0360-00804-0031
16 PIN I.C. SOCKET	1	ICS U8	110E-00001-0003
20 PIN I.C. SOCKET	1	ICS U4	110E-00001-0005
28 PIN I.C. SOCKET	6	ICS U9-ICS U14	110E-00001-0010
40 PIN I.C. SOCKET	1	ICS U7	110E-00001-0011
64 PIN I.C. SOCKET	1	ICS U3	110E-00001-0016
HEATSINK TO-220	1	HS U15	112E-00001-0011
HEATSINK TO-220	1	HS U17	0E47-00804-0001
SIL PAD THERMAL WASHER	2	INS U15, INS U17	0017-00042-0319
SCREW, 6-32	1	MH U15	0017-00101-0339
NUT, 6-32	1	MH U15	0017-00103-0005
WASHER, #6 STAR	1	MH U15	0017-00104-0009
SCREW, 4-40	1	MH U17	0017-00101-0731
NUT, 4-40	1	MH U17	0017-00103-0002
WASHER, #4 STAR	1	MH U17	0017-00104-0071
AUTO INSERT PIN TIN .045 SQ.	16	J1,J2	0304-00804-0010
JUMPER WIRE	12	JW1-JW12	
GREEN LED	1	LED 1	117E-00001-0003
TEST POINT	2	TP1,TP2	119E-00001-0001
PC MTG. SWITCH	1	SW1	0017-00007-0131
PC BOARD	1	--	0986-00804-3100
			A080-91864-C000

8/01/86 Rev. 1 - Changed Filter Values, C13,C15,C16,C18,C19,R39 CMM
8/05/86 Rev. 2 - Removed D1 CMM.
8/11/86 Rev. 3 - Added CP11-CP13 CMM.
8/15/86 Rev. 4 - Added ICS U13, ICS U14. Fixed Desig. list U5, U6.
Corrected qty. of Ferrite Bead.

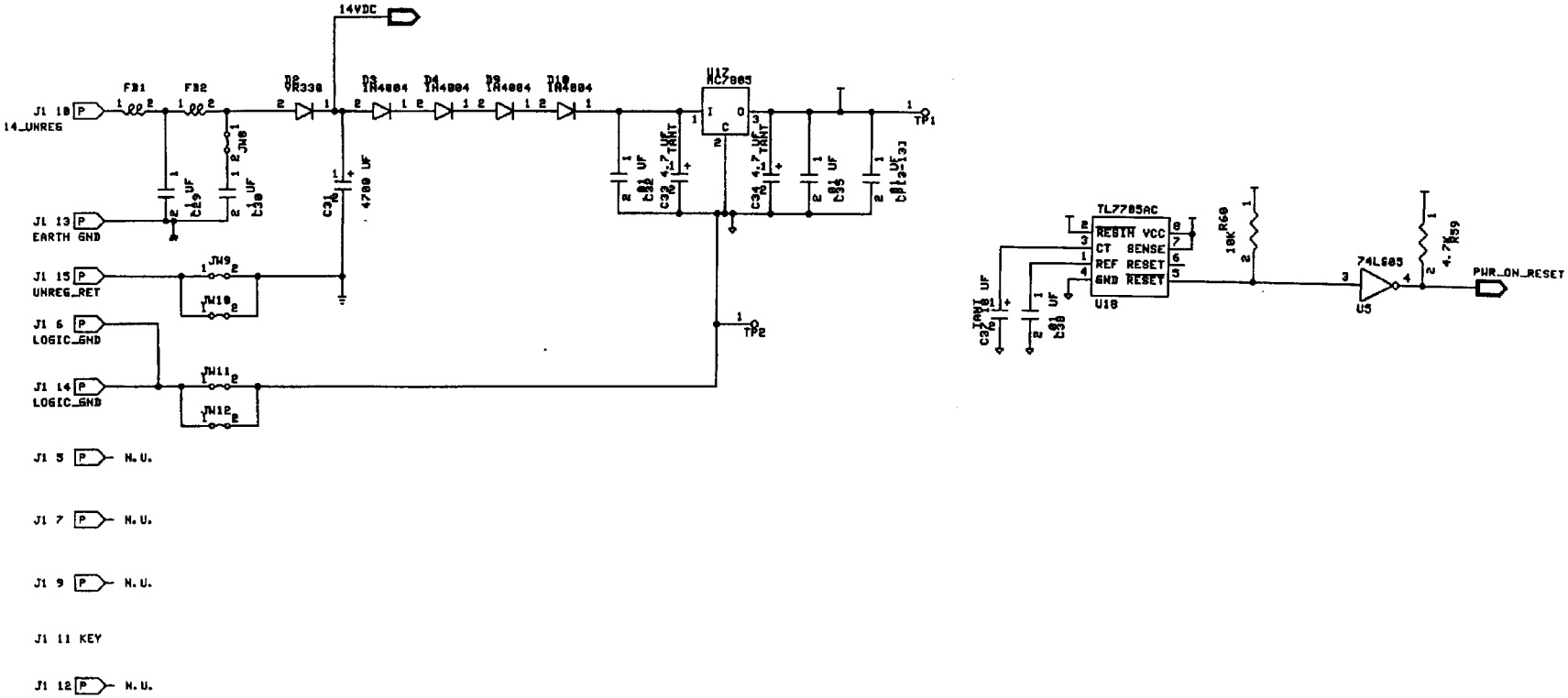

8/11/86 REV 3 - Added CP11-CP13. CMM

NOTES: C. MEDNICK	BALLY MIDWAY MFG. CO.
1 PER 24 JULY 86	SOUNDS DELUXE A884-91864-C888 A851-88114-C155
	SHEET 2 OF 6 REV

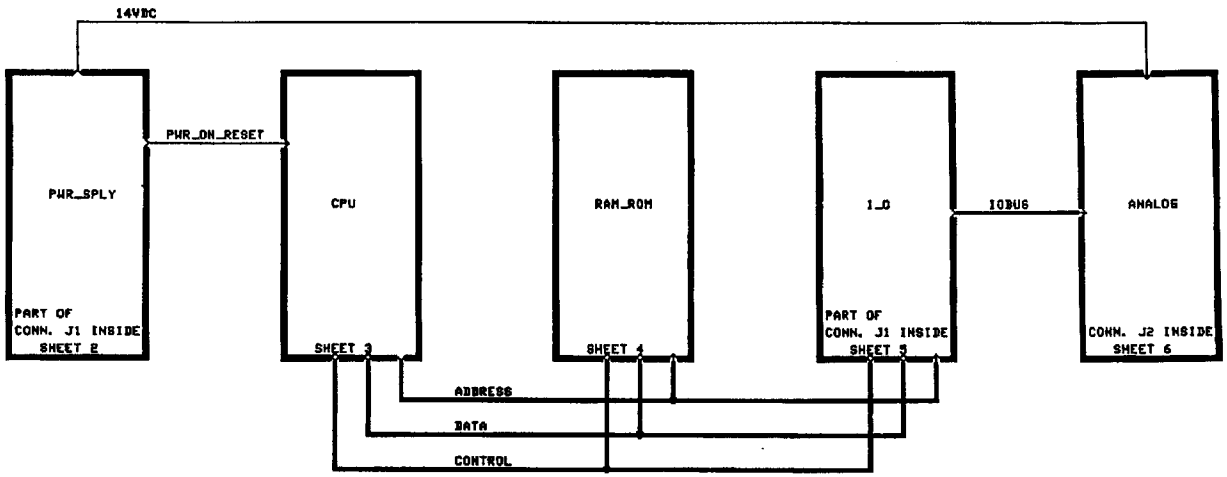

8/11/86 REV 3 - Changed Page 2. CMM
8/4/86 REV 2 - Changed Page 3. CMM
8/1/86 REV 1 - Changed Page 6

NOTES: C. MEDNICK	BALLY MIDWAY MFG. CO.
1 PER 24 JULY 86	SOUNDS DELUXE A884-91864-C888 M051-00114-C155
	SHEET 1 OF 6 REV

LAST USED: C39,CP13,D10,FB3,J2,JW12,L2,R68,SW1,TP2,LED1,VR1
NOT INSERTED: C3-C5,C36,D1,D5-D8,Q3-Q6,R18-R12,R44-R58
NOT USED: R9

11 AUG 86 14:43 /USER/CHM/CSPIN 1.DRAW

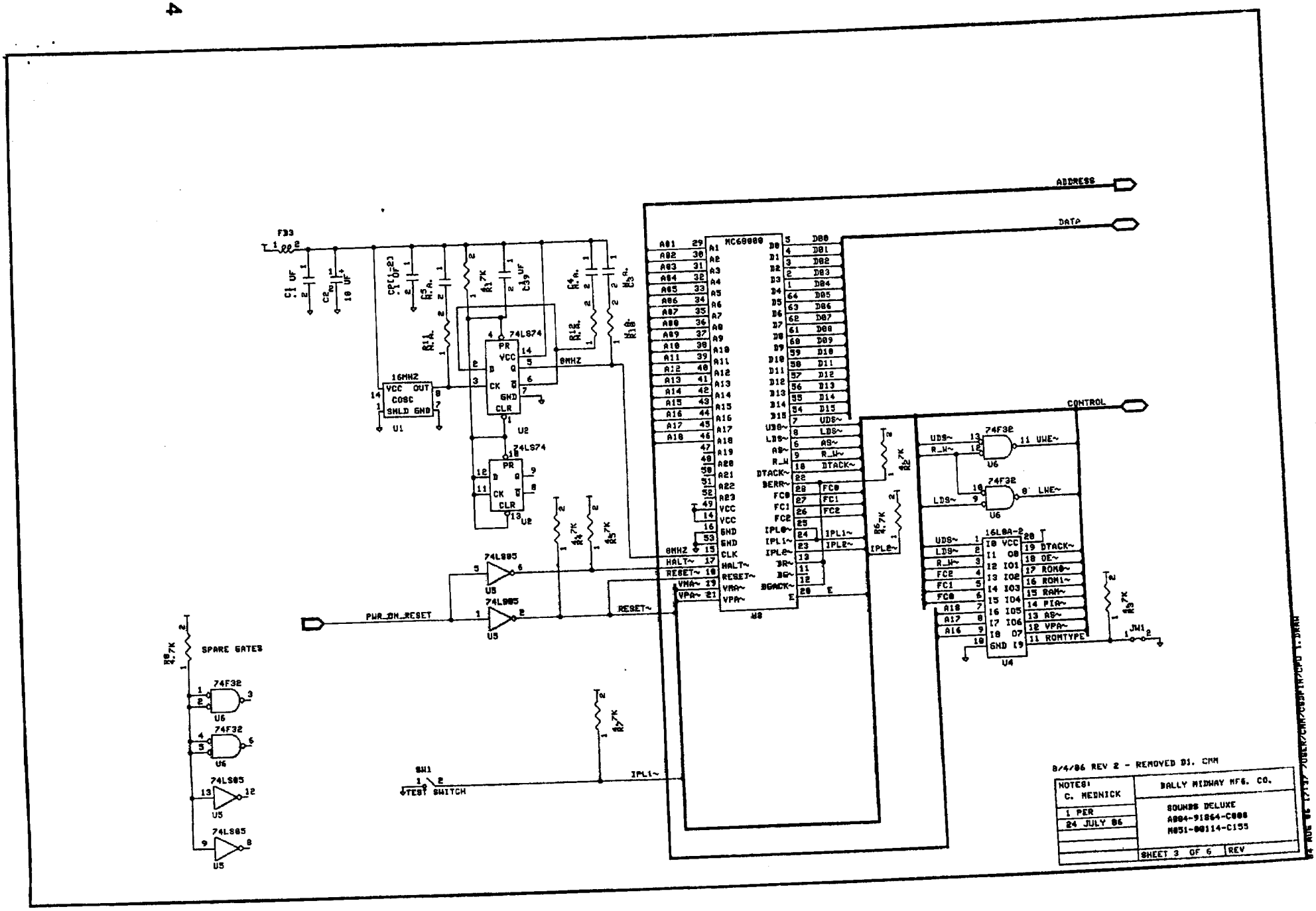
ADDRESS
DATA
CONTROL
MC68000
U8
74LS74
U2
16MHZ
U1
74LS05
U5
74F32
U6
16L8A-2
U4
SPARE GATES
PWR_ON_RESET
RESET~
8MHZ
IPL1~
SW1
TEST SWITCH
JM1
8/4/86 REV 2 - REMOVED D1. CRM
NOTES:
C. MEDNICK
1 PER
24 JULY 86
BALLY MIDWAY MFG. CO.
SOUNDS DELUXE
A804-91864-C888
M051-00114-C155
SHEET 3 OF 6
REV

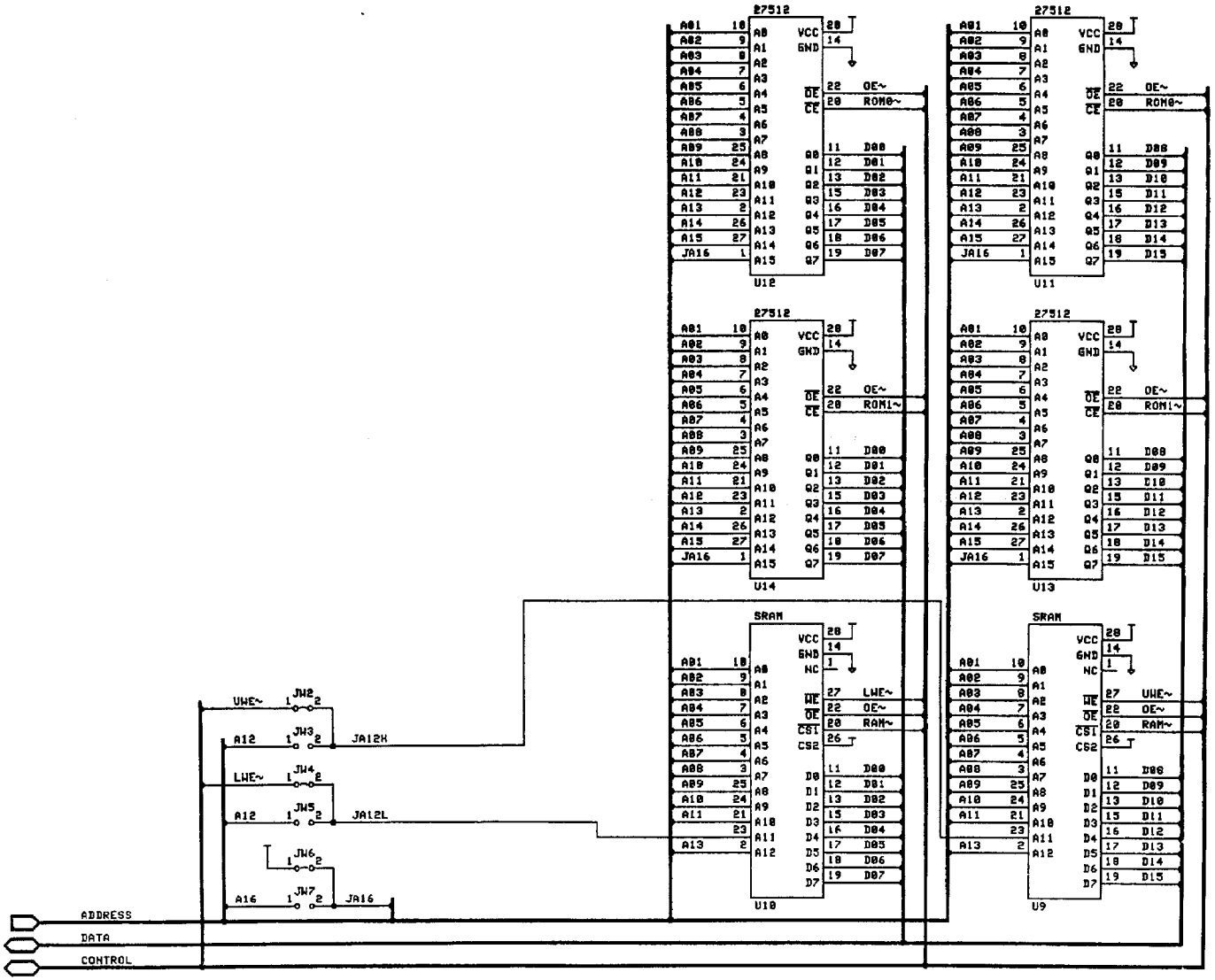

NOTES: C. MEDNICK	BALLY MIDWAY MFG. CO.
1 PER	SOUNDS DELUXE
24 JULY 86	A084-91864-C000
	M051-00114-C155
	SHEET 4 OF 6 REV

25 JUL 86 16:13 /USER/CHM/CSDPIN/RAM_ROM_1.DRAW

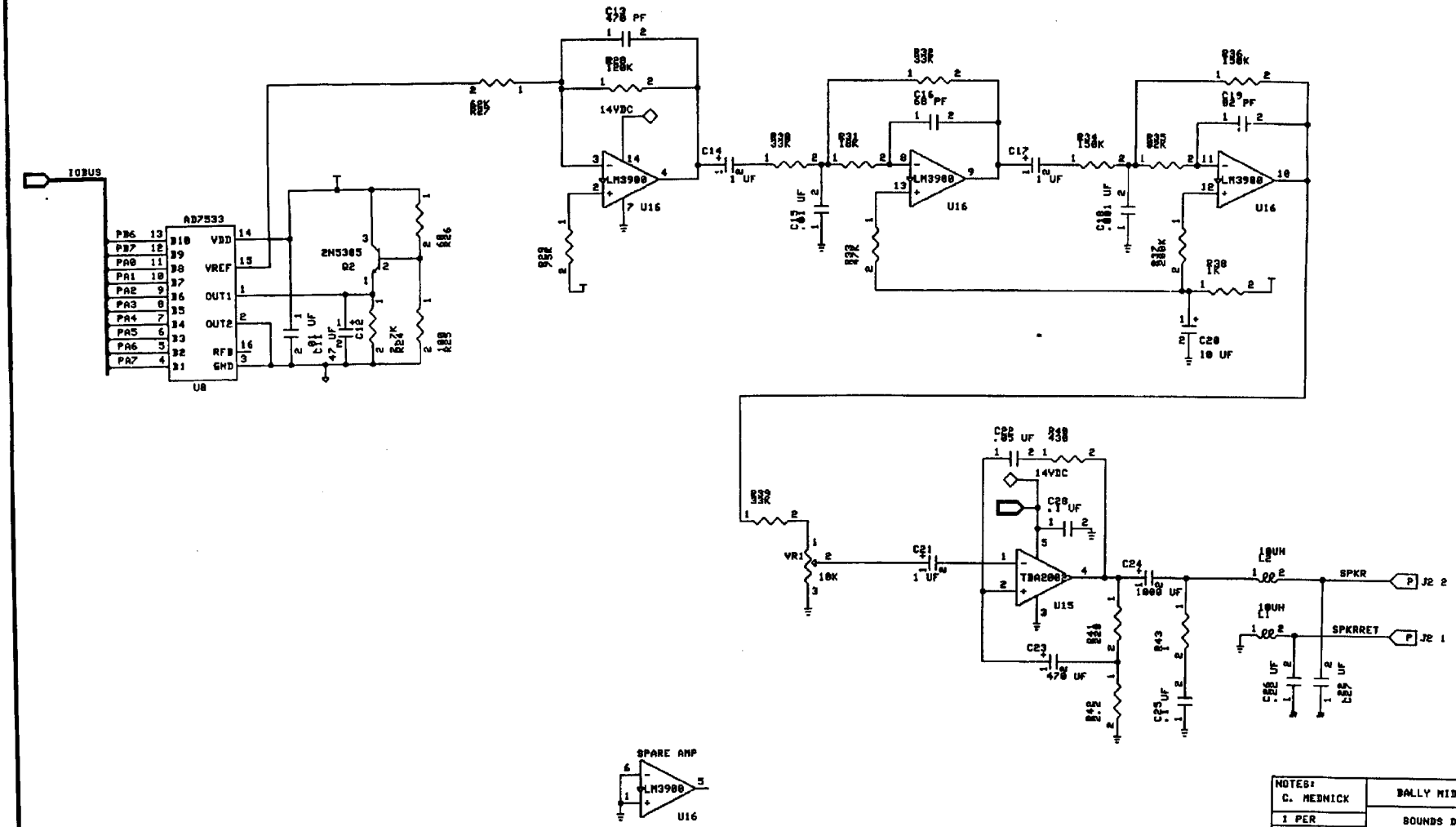

NOTES: C. MEDNICK	BALLY MIDWAY MFG. CO.
1 PER	BOUNDS DELUXE
24 JULY 86	A084-91864-C000
	M051-00114-C155
	SHEET 6 OF 6 REV

8/1/86 REV 1 - CHANGED FILTER VALUES, C13,C15,C16,C18,C19,R39

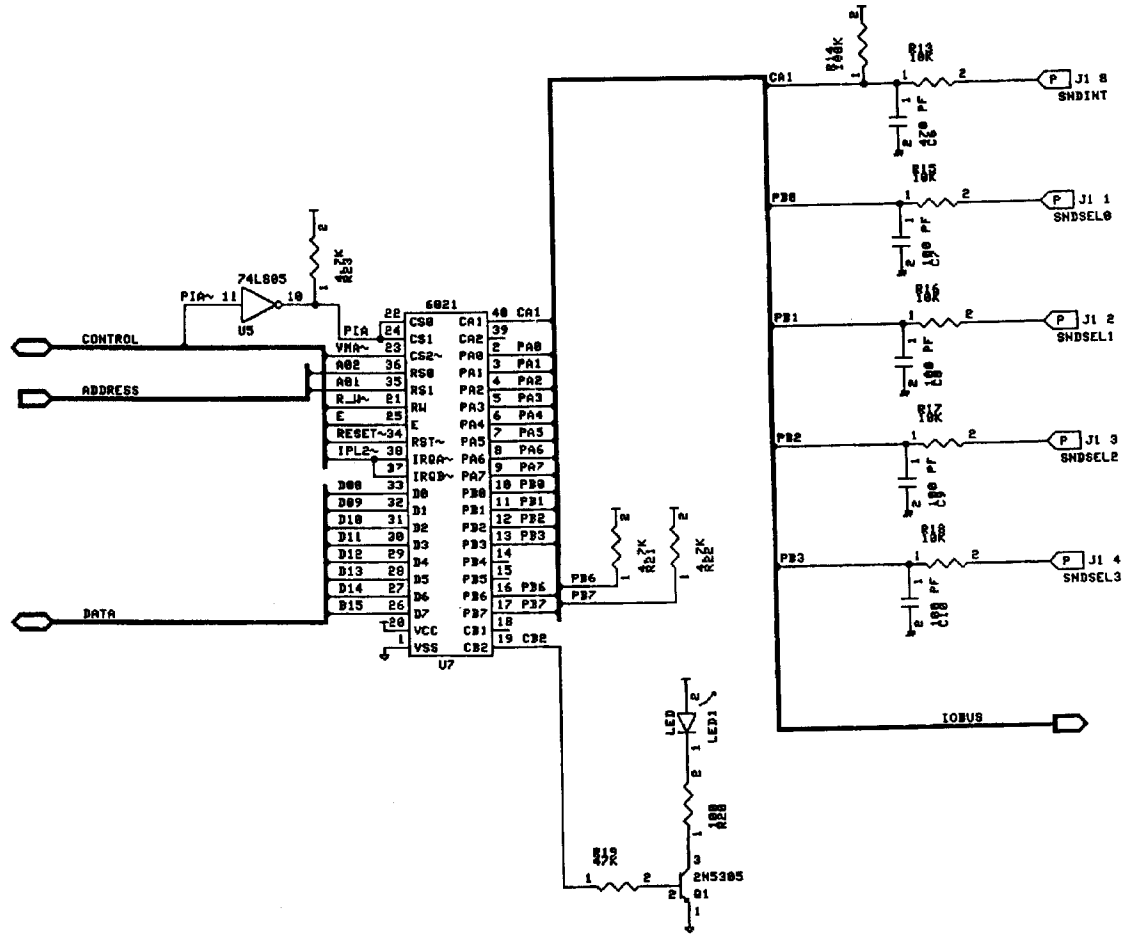

NOTES: C. MEDNICK	BALLY MIDWAY MFG. CO.
1 PER	SOUNDS DELUXE
24 JULY 86	A084-91864-C000
	M*51-00114-C155
	SHEET 5 OF 6 REV

24 JUL 86 11:19 /USER/CAM/CDP/N/1_0_1.DWG

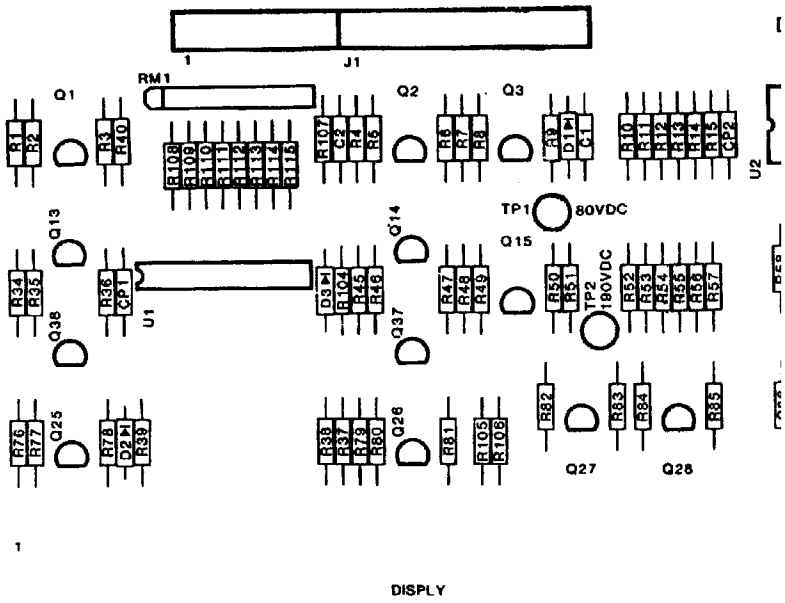

DIM. TOLERANCES
UNLESS OTHERWISE SPEC.
CONCENTRICITY T.I.R. . 002
FRACTIONAL ..... ±.1/64
DECIMAL ..... ±.005
HOLE DIA. .... +.002—.000
ANGLE ..... ±1/2°
DO NOT SCALE DWG.

FIRS USE

DRN

MECH

ELEC

RUNING- 40-107

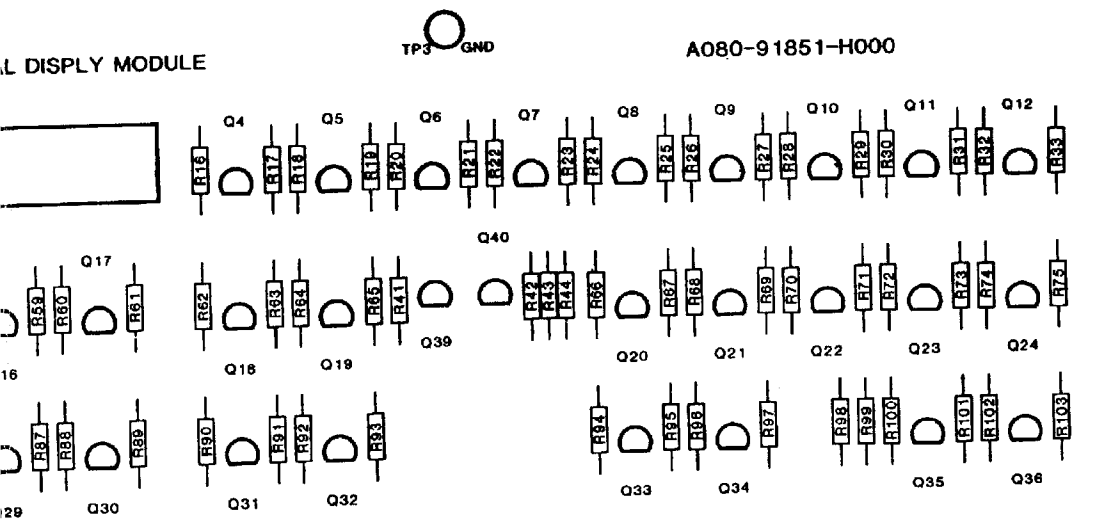

THIS DWG. IS CONFIDENTIAL & PROPERTY OF BALLY/MIDWAY MFG. CO.

ON PIN BALL	Bally/MIDWAY MFG. CO. FRANKLIN PARK, IL 60131	REL. FOR PRODUCTION 5/15/87	
BB DATE 5/15/87 SCALE FULL		REVISIONS	
CHK. MAT'L.	ASSEMBLY DRAWING DUAL DISPLAY MODULE A084-91851-H000	PART NO. M-0-5-1-0-0-3-6-5-H-0-3-3	
CHK. FINISH			

DESIGNATION LIST

IPTION	DESIGNATION NO.	DESCRIPTION
1/4W 1% METAL FILM	C1	.01UF 500V CER.
1/4W 1% METAL FILM	C2	100PF 50V AX. CER.
1/4W 5% CARBON	CP1, CP2	.01UF 50V CER.
1/4W 5% CARBON	D1	1M110ZS10 110V ZENER DIODE
1/4W 1% METAL FILM	D2,D3	1N4148 DIODE
1/4W 5% CARBON	Q1 - Q4	MPS-A-42 NPN XSTR
1/4W 1% METAL FILM	Q5	2N5401 PNP XSTR
1/4W 5% CARBON	Q6	MPS-A-42
1/4W 1% METAL FILM	Q7	2N5401
1/4W 5% CARBON	Q8	MPS-A-42
1/4W 1% METAL FILM	Q9	2N5401
1/4W 5% CARBON	Q10 - Q21	MPS-A-42
1/4W 5% CARBON	Q22 - Q24	2N5401
1/4W 5% CARBON	Q25	MPS-A-42
1/4W 5% CARBON	Q26	MPS-A-42
1/4W 5% CARBON	Q27	2N5401
1/4W 5% CARBON	Q28	MPS-A-42
1/4W 5% CARBON	Q29 - Q35	2N5401
HM 1/4W 5% CARBON	Q36 - Q40	MPS-A-42
1/4W 5% CARBON	U1	74HC373 CMOS OCTAL LATCH
1/4W 5% CARBON	U2	14514 1-16 DECODER
HM 1/4W 5% CARBON	DISPLAY 1	14 DIGIT, 9 SEGMENT GAS DISCHARGE DISPLAY
1/4W 5% CARBON	J1	.025 SQ. PINS
1/4W 5% CARBON	TP1, TP2, TP3	TEST LOOPS
1/4W 5% CARBON		FOAM TAPE
1/4W 1% METAL FILM		BUMPER
1/4W 5% CARBON		DISPLAY MTG. CLIPS
1/4W 5% CARBON		SCREWS
1/4W 5% CARBON	M051-00365- A041	DISPLAY MTG. PROCEDURE
1/4W 5% CARBON	A080-91851-H000	DUAL DISPLAY MODULE P.C.B.
1/4W 5% CARBON		
1/4W 5% CARBON		
1/4W 5% CARBON		
1/4W 5% CARBON		
1/4W 5% CARBON		
1/4W 5% CARBON		
1/4W 5% CARBON		
1/4W 5% CARBON		
1/4W 5% CARBON		
1/4W 5% CARBON		
1/4W 5% CARBON		
1/4W 5% CARBON		
1/4W 1% METAL FILM		
1/4W 5% CARBON		
1/4W 5% CARBON		
1/4W 5% CARBON		
1/4W 5% CARBON		
1/4W 5% CARBON		
10 PIN SIP		

DESIGNATION LIST

DESIGNATION NO.	DESCRIPTION
R1	1.5K 1/4W 5% CARBON
R2	820 OHM 1/4W 5% CARBON
R3	300K 1/4W 5% CARBON
R4	1.5K 1/4W 5% CARBON
R5	510 OHM 1/4W 5% CARBON
R6	300K 1/4W 5% CARBON
R7	1.5K 1/4W 5% CARBON
R8	820 OHM 1/4W 5% CARBON
R9	300K 1/4W 5% CARBON
R10 - R15	20K 1/4W 5% CARBON
R16	9.1K 1/4W 5% CARBON
R17	100K 1/4W 1% METAL FILM
R18	2.2K 1/4W 5% CARBON
R19	300K 1/4W 5% CARBON
R20	9.1K 1/4W 5% CARBON
R21	100K 1/4W 1% METAL FILM
R22	2.2K 1/4W 5% CARBON
R23	300K 1/4W 5% CARBON
R24	9.1K 1/4W 5% CARBON
R25	100K 1/4W 1% METAL FILM
R26	2.2K 1/4W 5% CARBON
R27	300K 1/4W 5% CARBON
R28	9.1K 1/4W 5% CARBON
R29	100K 1/4W 1% METAL FILM
R30	9.1K 1/4W 5% CARBON
R31	100K 1/4W 1% METAL FILM
R32	9.1K 1/4W 5% CARBON
R33	100K 1/4W 1% METAL FILM
R34	1.5K 1/4W 5% CARBON
R35	820 OHM 1/4W 5% CARBON
R36	300K 1/4W 5% CARBON
R37	300K 1/4W 5% CARBON
R38	1.5K 1/4W 5% CARBON
R39	1K 1/4W 5% CARBON
R40	100K 1/4W 5% CARBON
R41	100K 1/4W 5% CARBON
R42	1K 1/4W 5% CARBON
R43	1.5K 1/4W 5% CARBON
R44	300K 1/4W 5% CARBON
R45	1.5K 1/4W 5% CARBON
R46	820 OHM 1/4W 5% CARBON
R47	300K 1/4W 5% CARBON
R48	1.5K 1/4W 5% CARBON
R49	820 OHM 1/4W 5% CARBON
R50	300K 1/4W 5% CARBON
R51	100K 1/4W 1% METAL FILM
R52 - R57	2.2M 1/4W 5% CARBON
R58	9.1K 1/4W 5% CARBON

DU
M051-00365-

DESIGNATION LIST

DESIGNATION NO.	DE
R59	10
R60	10
R61	9.
R62	9.
R63	10
R64	9.
R65	10
R66	9.
R67	10
R68	9.
R69	10
R70	30
R71	2.
R72	30
R73	2.
R74	30
R75	2.
R76	1.
R77	82
R78	30
R79	1.
R80	82
R81	30
R82	30
R83	2.
R84	10
R85	9.
R86	30
R87	2.
R88	2.
R89	30
R90	30
R91	2.
R92	30
R93	2.
R94	30
R95	2.
R96	30
R97	2.
R98	10
R99	1M
R100	30
R101	2.
R102	10
R103	9.
R104	15
R105	10
R106	1M
R107	10
R108-R115	20
RM1	10

CROSS REFERENCE LIST

DESCRIPTION	QTY.	DESIGNATION NO.	PART NOS.
510 OHM 1/4W 5% CARBON	1	R5	100E-00005-0053
820 OHM 1/4W 5% CARBON	7	R2,R8,R35,R46 R49,R77,R80	100E-00005-0058
1K 1/4W 5% CARBON	2	R39,R42	100E-00005-0061
1.5K 1/4W 5% CARBON	10	R1,R4,R7,R34,R38 R43,R45,R48 R76,R79	100E-00005-0065
2.2K 1/4W 5% CARBON	14	R18,R22,R26,R71 R73,R75,R83,R87 R88,R91,R93,R95 R97,R101	100E-00005-0069
9.1K 1/4W 5% CARBON	14	R16,R20,R24,R28 R30,R32,R58,R61 R62,R64,R66,R68 R85,R103	100E-00005-0087
10K 1/4W 5% CARBON	1	R107	100E-00005-0088
20K 1/4W 5% CARBON	14	R10-R15,R108-R115	100E-00005-0095
100K 1/4W 5% CARBON	2	R40,R41	100E-00005-0115
100K 1/4W 1% METAL FILM	15	R17,R21,R25,R29 R31,R33,R51,R59 R60,R63,R65,R67 R69,R84,R102	100E-00001-0046
150K 1/4W 5% CARBON	1	R104	100E-00005-0120
300K 1/4W 5% CARBON	24	R3,R6,R9,R19,R23 R27,R36,R37,R44, R47,R50,R70,R72, R74,R78,R81,R82, R86,R89,R90,R92, R94,R96,R100	100E-00005-0127
1.0M OHM 1/4W 5% CARBON	2	R99,R106	100E-00005-0140
2.2M OHM 1/4W 5% CARBON	6	R52 - R57	100E-00005-0147
100K 10 PIN SIP	1	RM1	102E-00004-0045
10.0M OHM 1/4W 5% CARBON	2	R98,R105	100E-00005-0162
100PF AX. CER.	1	C2	0639-00800-0003
.01UF	2	CP1,CP2	0360-00800-0005
.01UF 500V	1	C1	0360-00800-0013
1N4148	2	D2,D3	103E-00002-0005
1M110ZS10 110V ZENER DIODE	1	D1	103E-00001-0028
2N5401 PNP XSTR	14	Q5,Q7,Q9,Q22,Q23 Q24,Q27,Q29,Q30 Q31,Q32,Q33,Q34 Q35	0360-00802-0006
MPS-A-42 NPN XSTR	26	Q1-Q4,Q6,Q8,Q10-Q21,Q25,Q26,Q28 Q36-Q40	0360-00802-0007
14514 1-16 DECODER	1	U2	0360-00803-0013
74HC373 OCTAL LATCH	1	U1	0365-00803-0015
.025SQ. PINS	23	J1	0304-00804-0009
14 DIGIT, 9 SEGMENT GAS DISCHARGE DISPLAY	1	DISPLAY 1	119E-00002-0006
TEST LOOPS	3	TP1 - TP3	0017-00007-0131

DUAL DISPLAY MODULE
A084-91851-H000
M051-00365-H042 (Page 5 of 5) REV. 1

CROSS REFERENCE LIST

DESCRIPTION	QTY.	DESIGNATION NO.	PART NOS.
FOAM TAPE	2		0017-00081-0289
BUMPER	1		0017-00041-0598
DISPLAY MTG. CLIP	2		0365-00174-00XF
SCREW	2		0017-00101-0175
DISPLAY MTG. PROCEDURE	1		M051-00365-A041
DUAL DISPLAY MODULE PCB	1		A080-91851-H000

5/20/87 REV. 1 - CORRECTION TO DISPLAY MTG. PROCEDURE PART NO. GBB

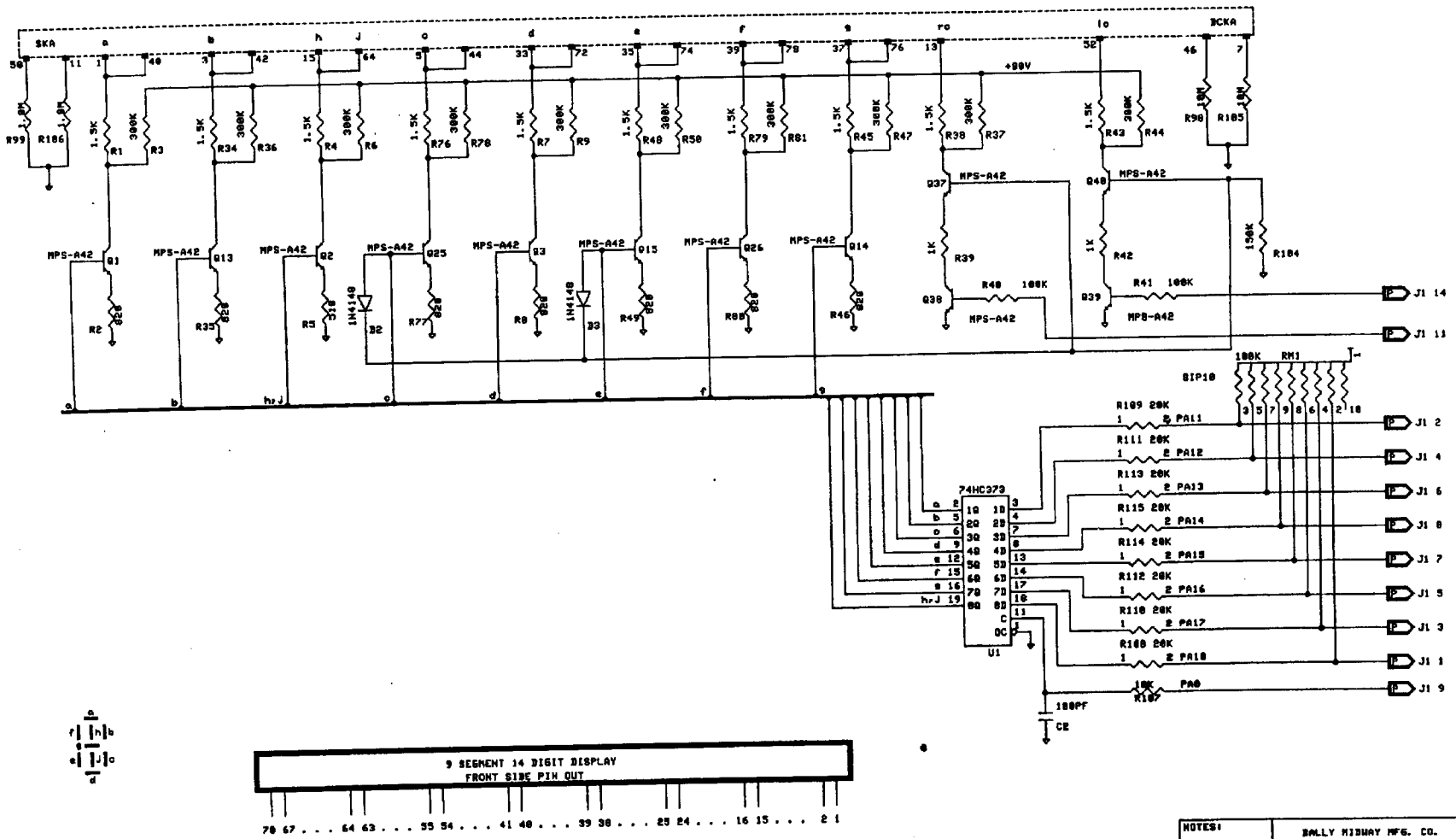

NOTES:	BALLY MIDWAY MFG. CO.
J.BOYDSTON 5/12/87	DUAL DISPLAY MODULE A6B4-91831-H008 M051-00365-H034
	SHEET 2 OF 2 REV

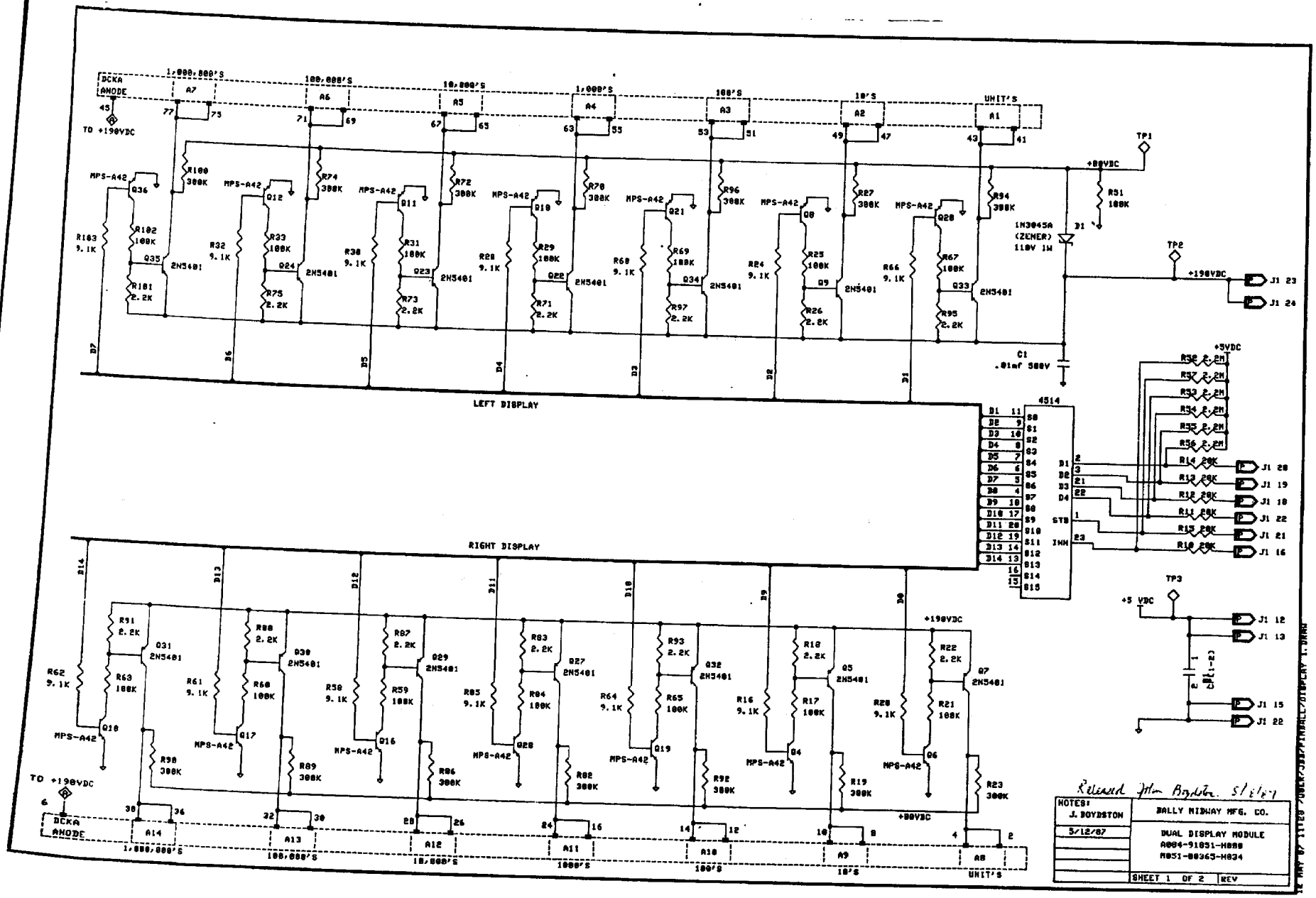
DCKA ANODE
TO +190VDC
1,000,000'S
100,000'S
10,000'S
1,000'S
100'S
10'S
UNIT'S
A1
A2
A3
A4
A5
A6
A7
A8
A9
A10
A11
A12
A13
A14
MPS-A42
2N5401
IN3045A (ZENER) 110V 1W
D1
C1 .01mf 500V
+80VDC
TP1
TP2
+190VDC
J1 23
J1 24
LEFT DISPLAY
RIGHT DISPLAY
4514
+5VDC
R38 2.2M
R37 2.2M
R36 2.2M
R35 2.2M
R34 2.2M
R33 2.2M
R14 20K
R13 20K
R12 20K
R11 20K
R10 20K
J1 20
J1 19
J1 18
J1 22
J1 21
J1 16
TP3
+5 VDC
J1 12
J1 13
J1 15
J1 22
C1(1-2)
TO +190VDC
DCKA ANODE
Richard John Boydston 5/12/87
HOTES:
J. BOYDSTON
5/12/87
BALLY MIDWAY MFG. CO.
DUAL DISPLAY MODULE
A004-91851-H888
A051-88365-H834
SHEET 1 OF 2
REV

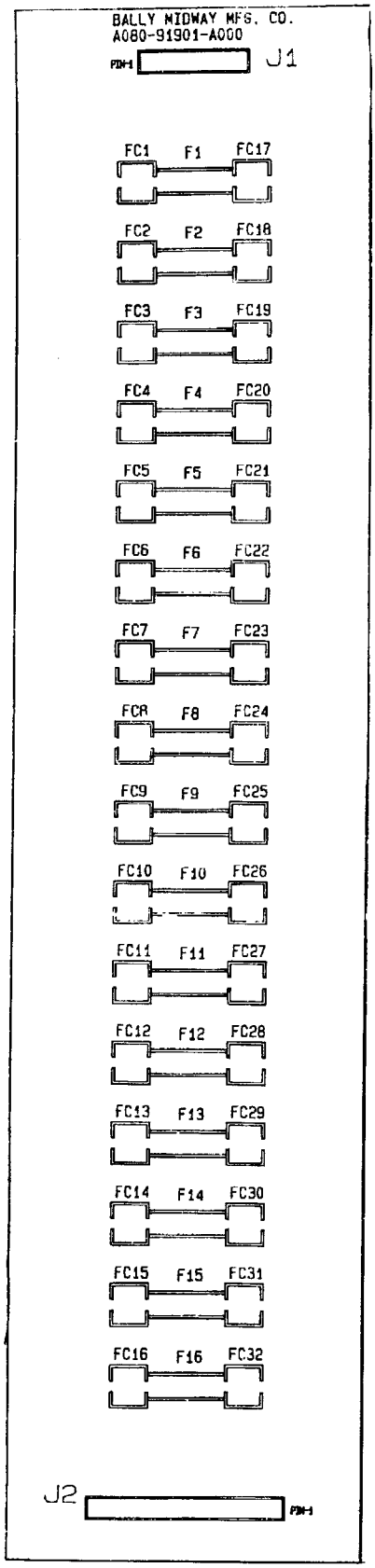

CROSS REFERENCE/DESIGNATION LIST
FOR BRIGHT LIGHTS FUSE BOARD
M051-00114-A211 / REV. 1

QTY.	DESCRIPTION	PART NO.	DESIGNATIO
32	PCB FUSE CLIPS	0017-00071-0034	F1-F16 (2 DE
1	17 POS. CONNECTOR KK100	0017-00021-1888	J2
1	9 POS. CONNECTOR KK100	0017-00021-1887	J1
1	RAW PC BOARD	A090-91901-A000	

REF:

LAYOUT/ASSEMBLY DRAWING M051-00114-A210
SCHEMATIC DRAWING M051-00114-A212
REV. 1 - CHANGED TO KK100 HEADERS 9/17/87 JBB

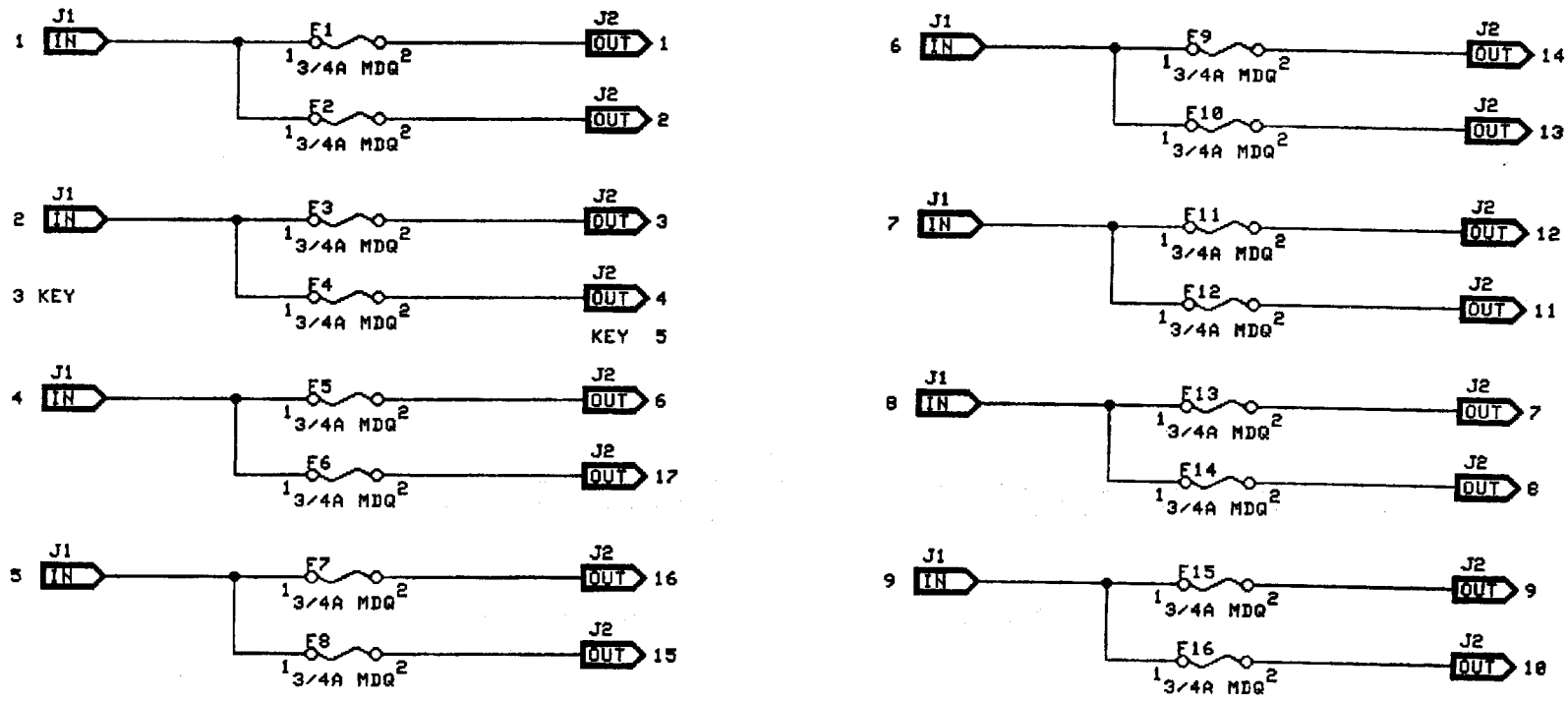

NOTES:	BALLY MIDWAY MFG. CO.
J. BOYDSTON	BRIGHT LIGHTS FUSE PCB
10-07-87	M051-00114-A212
	SHEET 1 OF 1 REV

07 OCT 87 09:47 /USER/DAN/FUZ_BD 1.DRAW

ID DRIVER LOCATIONS LISTING
00H06-A012

VER LOCATIONS

SE	WIRE	DESCRIPTION
	18	FLAME 16K
	45	FLAME 17K
	31	FLAME 18K
	15	FLAME 19K
	43	FLAME 20K
	18	LEVEL 2
	32	LEVEL 3
	37	LEVEL 4
	21	LEVEL 5
	25	RESTORE DUST BOTTOM
	41	RESTORE DUST TOP
	43	RESTORE SHIELD BOTTOM
	15	RESTORE SHIELD TOP
	12	RESTORE SWORD BOTTOM
	24	RESTORE SWORD TOP
	85	RESTORE WEAPONS
	96	RETURN LEFT
	94	RETURN RIGHT
	12	SHIELD LEFT
	24	SHIELD MIDDLE
	38	SHIELD RIGHT
	96	SKILL HELP LEFT
	94	SKILL HELP RIGHT
	13	SWORD LEFT
	25	SWORD MIDDLE
	41	SWORD RIGHT
	31	TELE LEFT BOTTOM
	45	TELE LEFT TOP
	14	TELE RIGHT BOTTOM
	26	TELE RIGHT TOP

SOLENOID DRIVER LOCATIONS

TRANSISTOR	CONNECTOR	PIN	WIRE	DESCRIPTION
Q11	J6	1	31	BUMPER TOP
Q12	J6	2	32	BUMPER LEFT
Q13	J6	3	34	BUMPER RIGHT
Q14	J6	4	35	BUMPER BOTTOM
Q16	J8	7	27	SLING LEFT
Q15	J8	6	25	SLING RIGHT
Q17	J6	5	36	RESET DTS
Q18	J9	1	51	KICKER LEFT
Q19	J9	2	52	KICKER RIGHT
Q20	J9	3	53	TELEPORT LEFT
Q21	J9	4	54	TELEPORT RIGHT
Q22	J9	6	56	OUTHOLE CONTROLLER
Q38	J9	7	57	RESERVED FOR GERMAN USE
Q39	J9	8	58	OUTHOLE
Q40	J9	11	59	KNOCKER
Q10	J6	7	311	RETURN RIGHT
Q7	J6	8	90	LEFT FLIPPER
Q7	J6	9	95	RIGHT FLIPPER
Q8	J9	10	24	RETURN LEFT

WIRE COLOR CODE

1-RED
2-BLUE
3-YELLOW
4-GREEN
5-WHITE
J-JUMPER
6-BROWN
7-ORANGE
8-BLACK
9-GREY
0-NO TRACE
11-VIOLET

1-FIRST NUMBER-BODY COLOR
2-SECOND NUMBER-TRACER COLOR

EXAMPLE: 50-WHITE
51-WHITE/RED

LAMP DRIVER LOCATIONS

DRIVER	CONNECTOR	PIN	PHASE	WIRE	DESCRIPTION
Q55	J10	16	B	38	ADVANCE LEVEL BOTTOM
Q24	J10	2	B	13	ADVANCE LEVEL TOP
Q36	J13	3	D	84	BRT BOTTOM SKILL
Q35	J13	2	C	83	BRT MILLION
Q51	J13	8	D	93	BRT DRAGON 1
Q66	J13	6	D	87	BRT DRAGON 2
Q66	J13	6	C	87	BRT DRAGON 3
Q36	J13	3	C	84	BRT DROP TARGET
Q35	J13	2	D	83	BRT DUST
Q67	J13	5	D	86	BRT EXTRA BALL
Q65	J11	1	C	48	BRT FLASH LEFT
Q34	J13	1	D	81	BRT FLASH RIGHT
Q65	J11	1	D	48	BRT LEFT SLING
Q67	J13	5	C	86	BRT MIDDLE SKILL
Q34	J13	1	C	81	BRT RIGHT SLING
Q52	J13	13	C	97	BRT SHIELD
Q51	J13	8	C	93	BRT SWORD
Q52	J13	13	D	97	BRT TOP SKILL
Q46	J11	16	B	78	BUMPER BOTTOM
Q60	J10	13	B	36	BUMPER LEFT
Q29	J11	8	B	64	BUMPER RIGHT
Q45	J10	10	B	28	BUMPER TOP
Q61	J11	6	B	62	DRAGON LAIR LEFT
Q30	J11	12	B	72	DRAGON LAIR RIGHT
Q49	J11	9	A	67	DUST 1
Q64	J11	2	A	58	DUST 2
Q33	J11	15	A	75	DUST 3
Q50	J11	7	A	63	DUST 4
Q42	J10	9	A	26	EXTRA LIFE
Q32	J11	14	A	74	FLAME 1K
Q63	J11	3	A	59	FLAME 2K
Q37	J13	4	A	85	FLAME 2X
Q48	J11	10	A	68	FLAME 3K
Q54	J13	11	A	95	FLAME 3X
Q31	J11	13	A	73	FLAME 4K
Q62	J11	4	A	61	FLAME 5K
Q47	J11	11	A	71	FLAME 6K
Q30	J11	12	A	72	FLAME 7K
Q61	J11	6	A	62	FLAME 8K
Q46	J11	16	A	78	FLAME 9K
Q29	J11	8	A	64	FLAME 10K
Q60	J10	13	A	36	FLAME 11K
Q45	J10	10	A	28	FLAME 12K
Q28	J10	6	A	21	FLAME 13K
Q59	J10	14	A	37	FLAME 14K
Q44	J10	12	A	32	FLAME 15K

LAMP DRIV

DRIVER	CONNECTOR	PIN	PHAS
Q27	J10	5	A
Q58	J10	19	A
Q43	J10	11	A
Q26	J10	4	A
Q57	J10	18	A
Q27	J10	5	B
Q44	J10	12	B
Q59	J10	14	B
Q28	J10	6	B
Q41	J10	8	B
Q56	J10	17	B
Q57	J10	18	B
Q26	J10	4	B
Q23	J10	1	B
Q70	J10	7	B
Q37	J13	4	B
Q53	J13	12	A
Q68	J13	10	A
Q23	J10	1	A
Q70	J10	7	A
Q55	J10	16	A
Q53	J13	12	B
Q68	J13	10	B
Q24	J10	2	A
Q41	J10	8	A
Q56	J10	17	A
Q43	J10	11	B
Q58	J10	19	B
Q25	J10	3	B
Q42	J10	9	B

GLOSSARY OF UNIQUE TERMS AND ABBREVIATIONS

The following list of unique terms and abbreviations are used in the DUNGEONS & DRAGONS Operating Manual. Service Technicians and Operators should note that more than one description may apply to a particular term or abbreviation. Also, more than one term or abbreviation may apply to a particular description. Either way, the Technician or Operator need only be concerned with correctly matching the term or abbreviation with the corresponding description.

TERM/ABBREVIATION	DESCRIPTION
A,AD,ADDR	Address
AX	Axial
BATT	Battery
BD, BRD	Board
BR	Bridge Spacer
C, CAP, CP	Capacitor, Common
CER	Ceramic
COM	Common
CON, CONN	Connector
CPURST	CPU Reset
CR	Diode
CRBN	Carbon
D	Data, Digital Display Module, Diode, Zener Diode
DISPLAY	Gas Discharge Display
F, FU	Fuse
FB	Ferrite Bead
FC	Fuse Clips
FL	Filter
HS	Heatsink
ICS, XU	I.C. Socket
INS	Silicon Pad Thermal Washer
J	Connector, Plug
JW	Jumper Wire
K	Relay
L	Inductor
LED	Infrared Light Emitting Diode
MH	Mechanical Hardware
MTG	Mounting
MTR	Meter
N.C.	Normally Closed
N.O.	Normally Open
PB	Push Button
PWR	Power
Q	Transistor, Silicon Controlled Rectifier (SCR), Darlington
R, RES, RM	Resistor
RTN	Return
S	Sound Module
SND	Sound
SW	Switch
T	Transformer
TP	Test Point, Test Loop
VA	Varistor
VR	Potentiometer, Varistor
XSTR	Transistor
XTAL, Y	Crystal

BALLY/MIDWAY'S DUNGEONS & DRAGONS
#H06
ROM/EPROM PART NUMBERS

UNPROGRAMMED CONTROL BOARD A084-91786-G000
PROGRAMMED CONTROL BOARD A084-91786-AH06

POS.	MIDWAY PART NUMBER
U2	H06A-12601-0000
U3	H06A-12602-0000

JUMPERS	IN	OUT
JW1		X
JW2	X	
JW3		X
JW4	X	
JW5		X
JW6	X	
JW7		X
JW8		X
JW9	X	
JW10	X	
JW11		X

UNPROGRAMMED SOUNDS DELUXE A084-91864-C000
PROGRAMMED SOUNDS DELUXE A084-91864-AH06

POS.	MIDWAY PART NUMBER
U11	H06A-12603-0000
U12	H06A-12604-0000
U13	H06A-12605-0000
U14	H06A-12606-0000

JUMPERS	IN	OUT
JW1	X	
JW2	X	
JW3		X
JW4	X	
JW5		X
JW6		X
JW7	X	
JW8-JW12	X	

M051-00H06-A008	REVISIONS
JBB 9-30-87	RELEASE FOR PRODUCTION